W60; W80; W90; W100

v.1

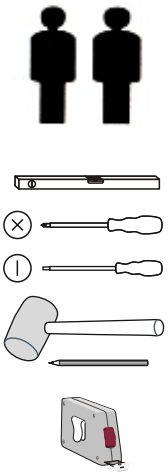

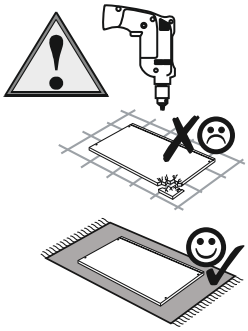

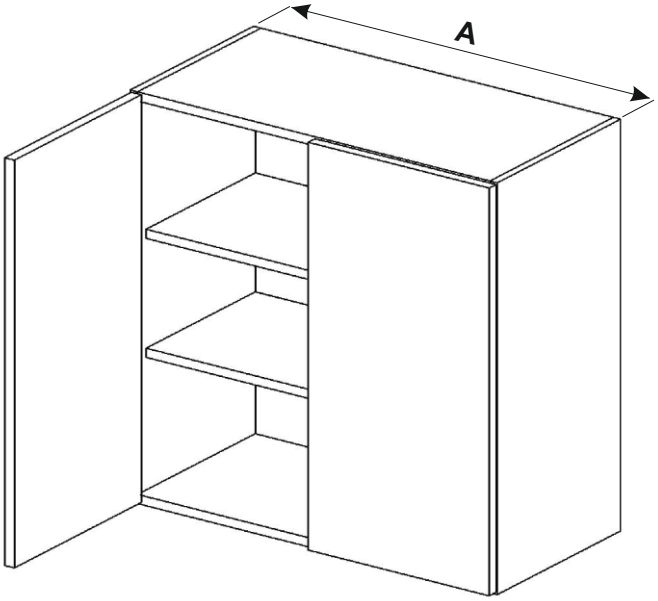

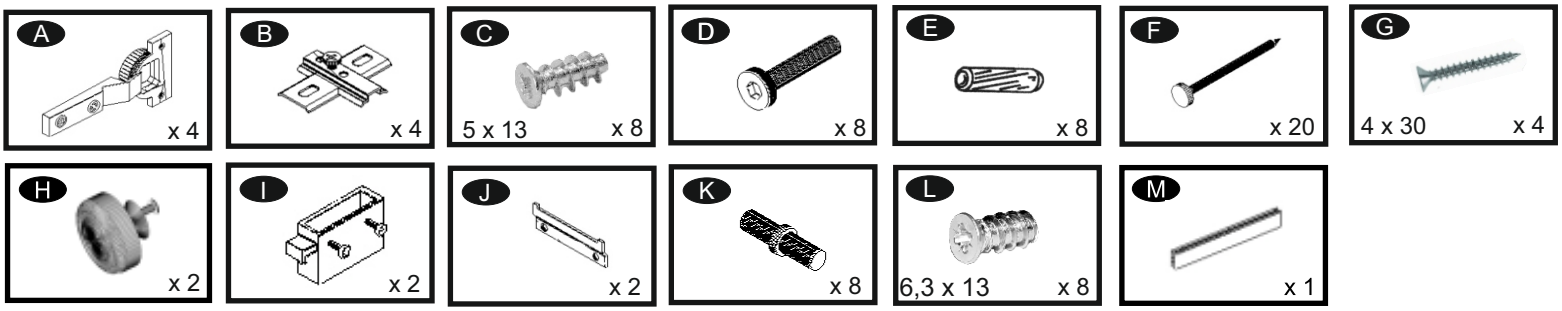

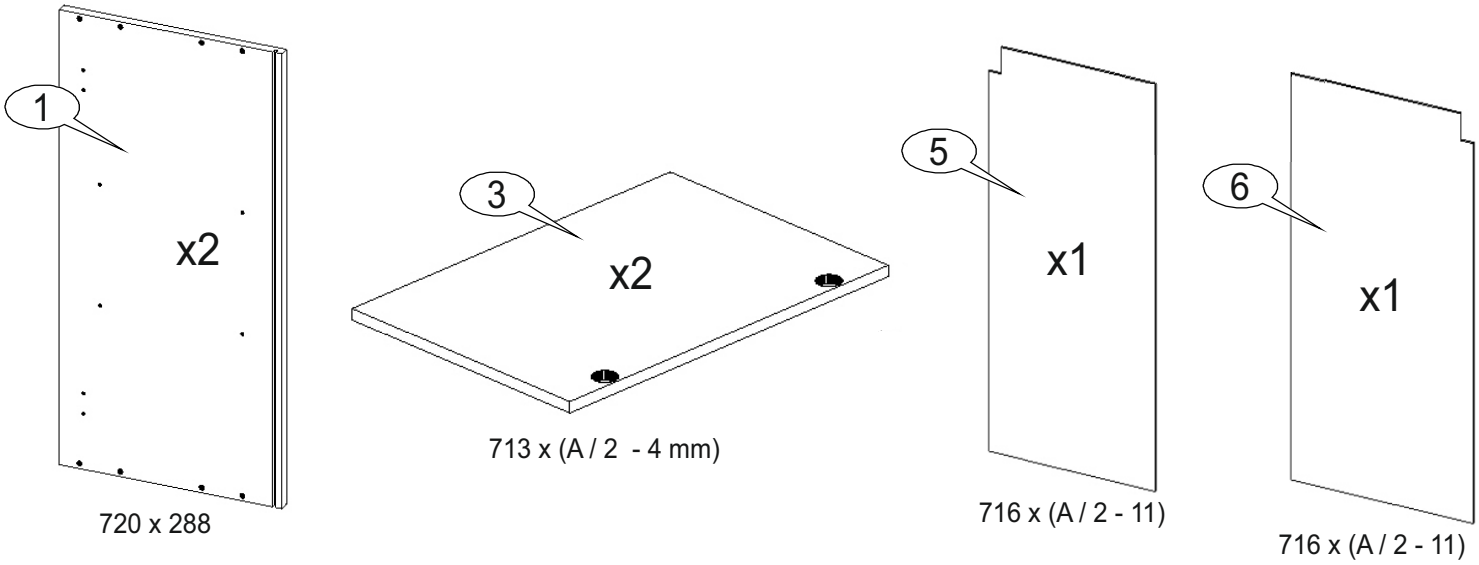

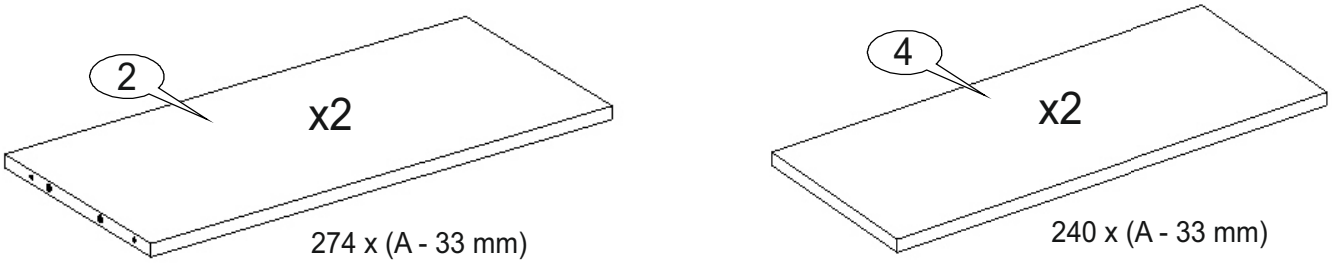

1

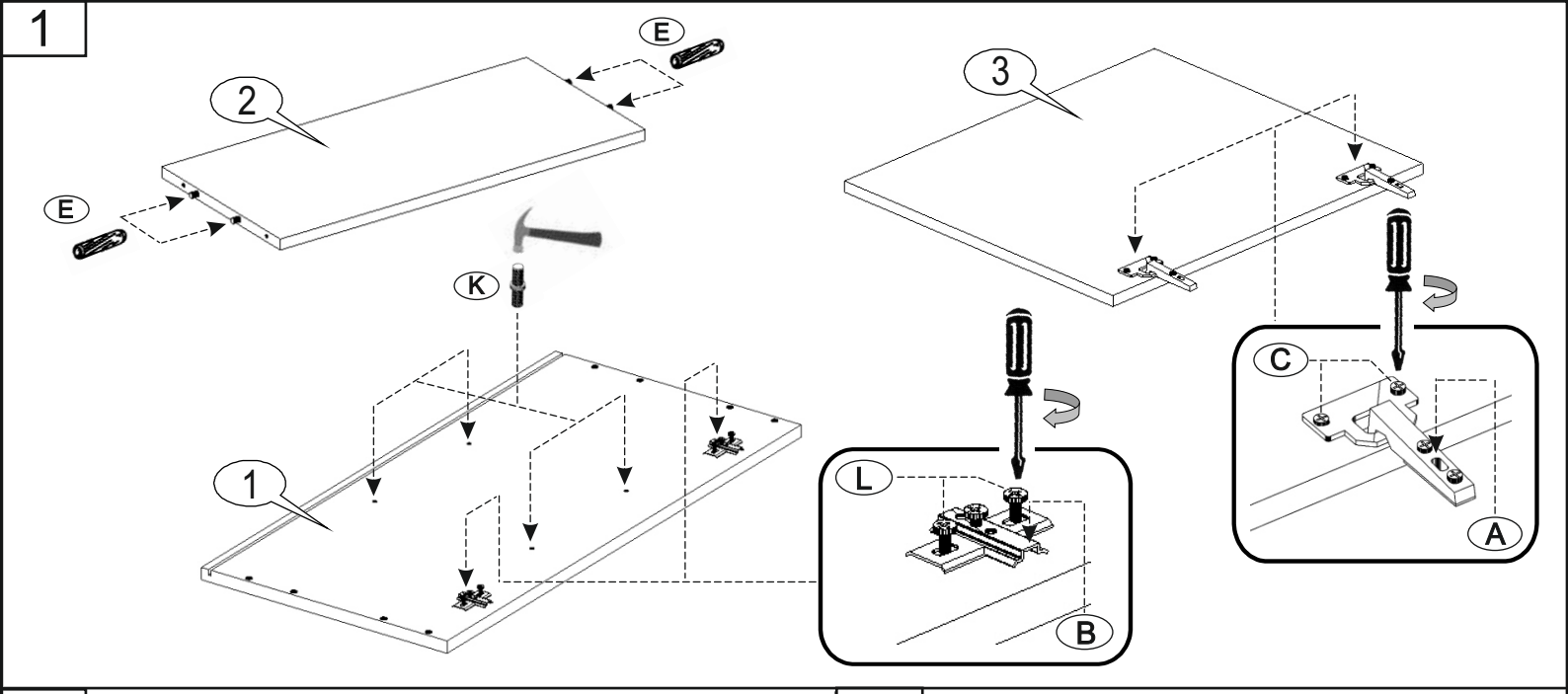
E
2
E
K
1
3
L
B
C
A

2

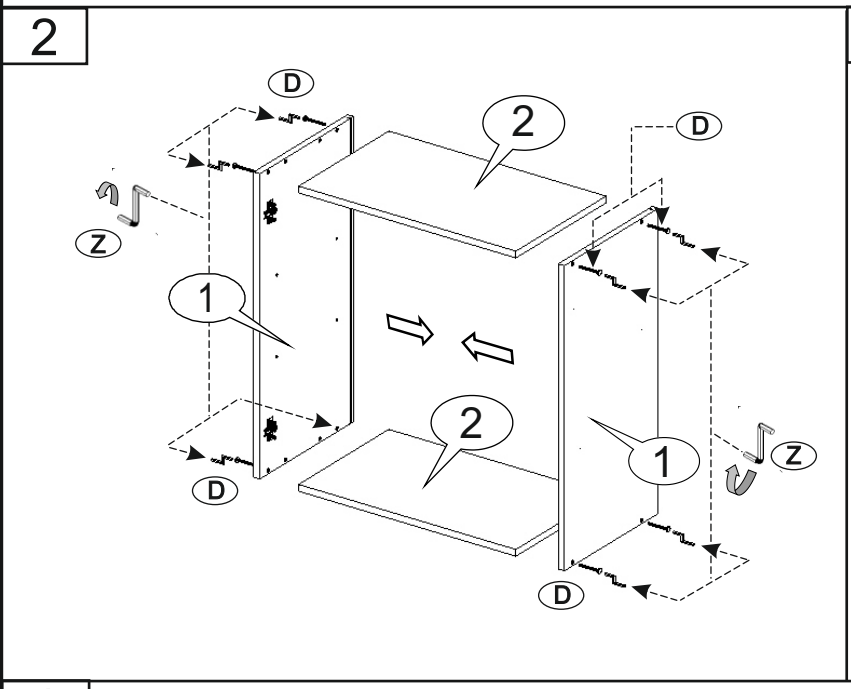
D
2
D
Z
1
2
1
Z
D
D

3

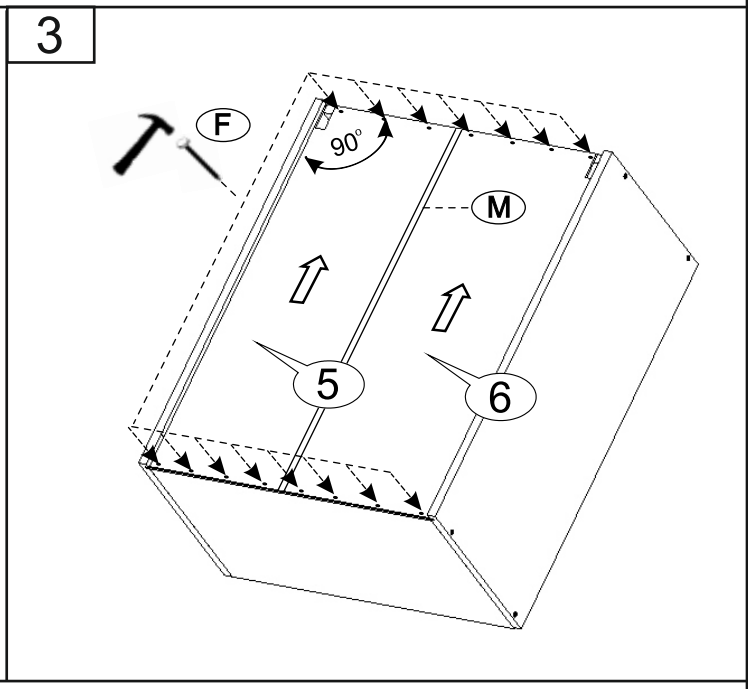
F
90°
M
5
6

4

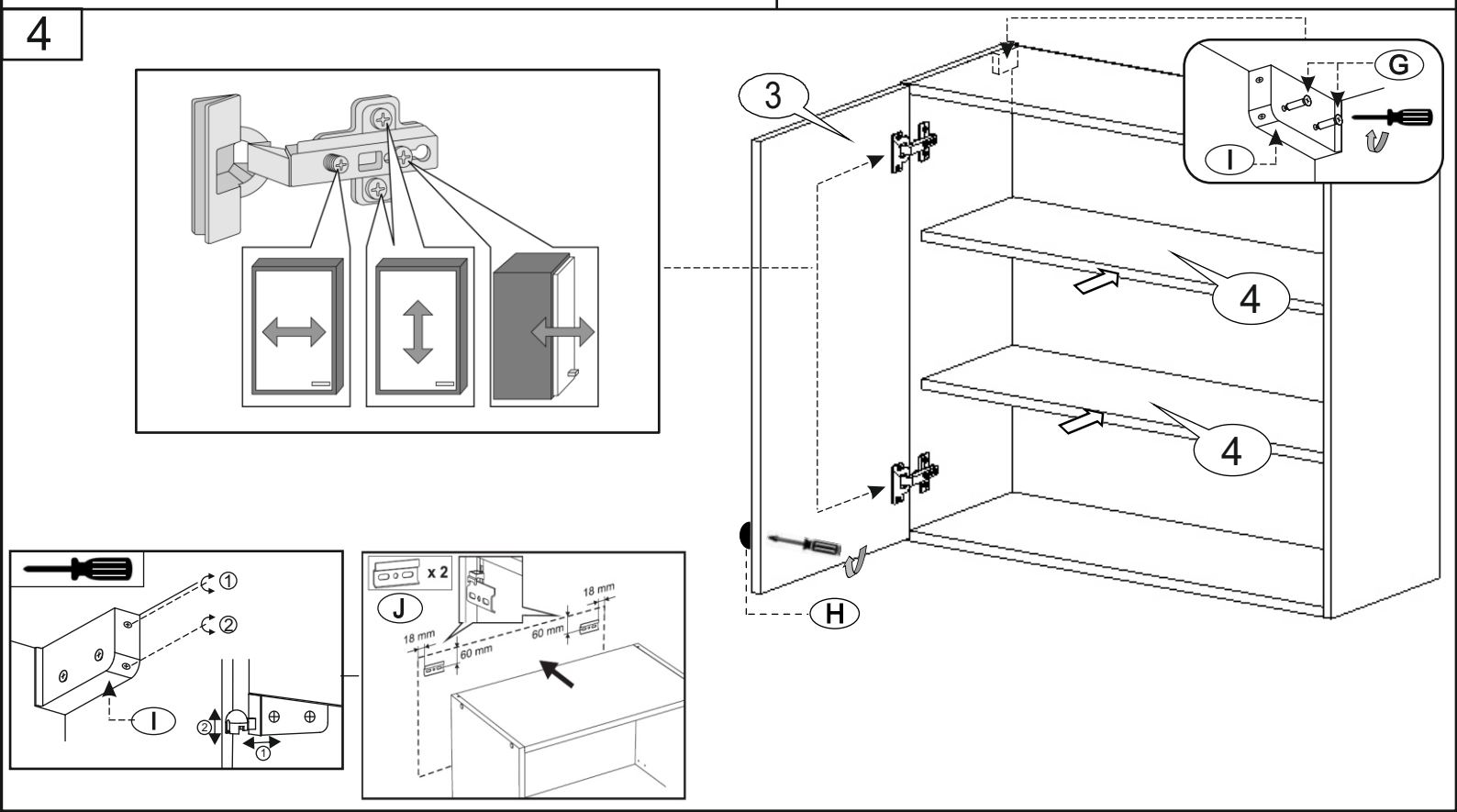
3
G
I
4
4
H
①
②
I
x 2
J
18 mm
60 mm
18 mm
60 mm