STD: W40 OK GR; W50 OK GR; W60 OK GR

v.2

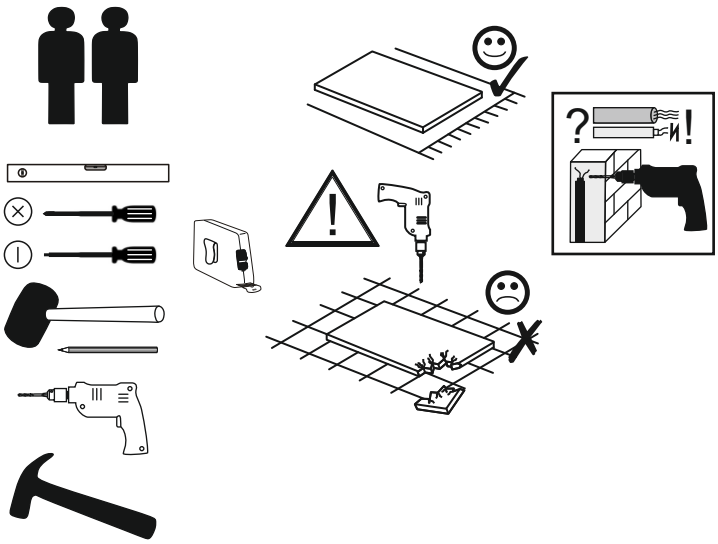

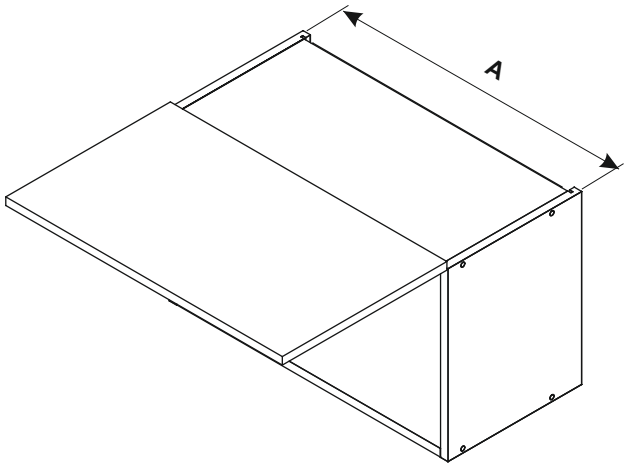

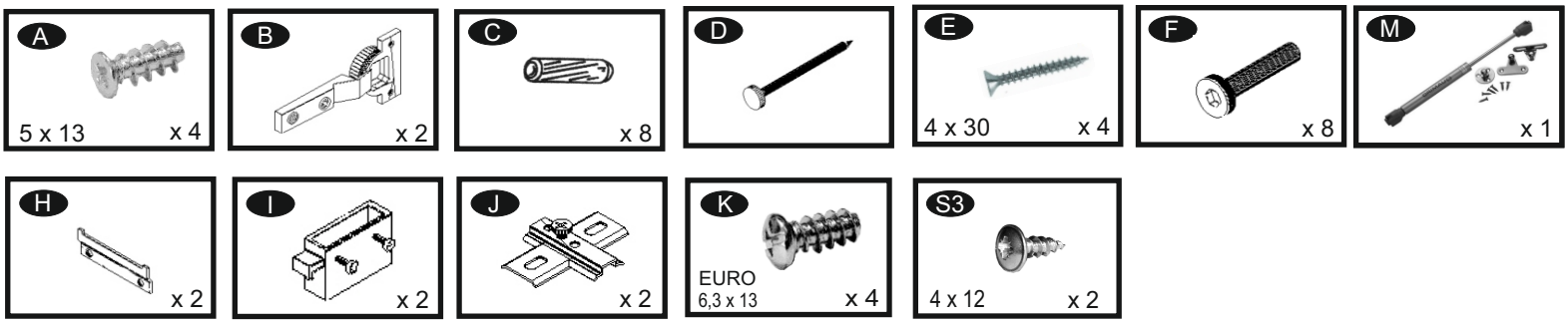

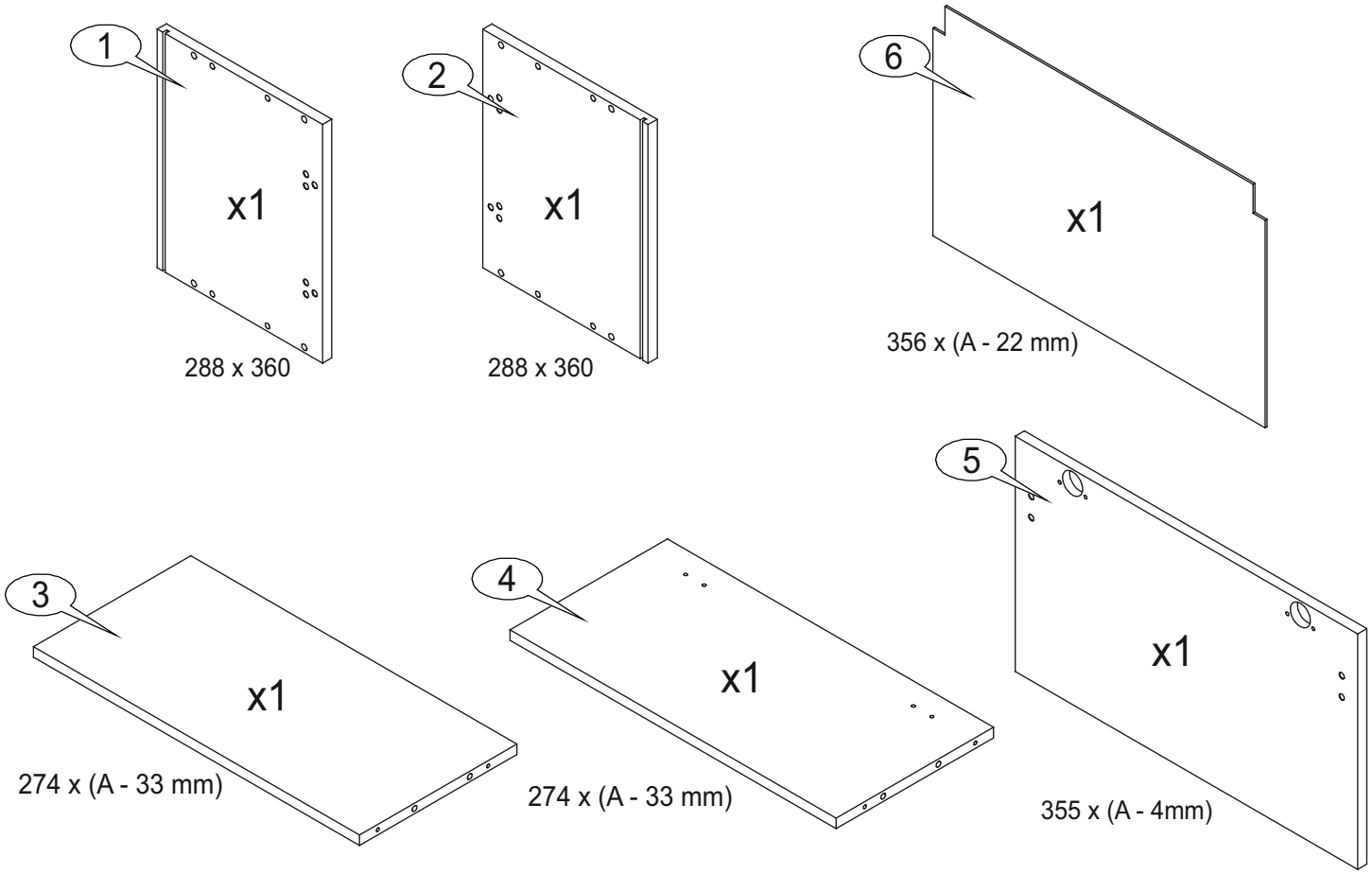

1

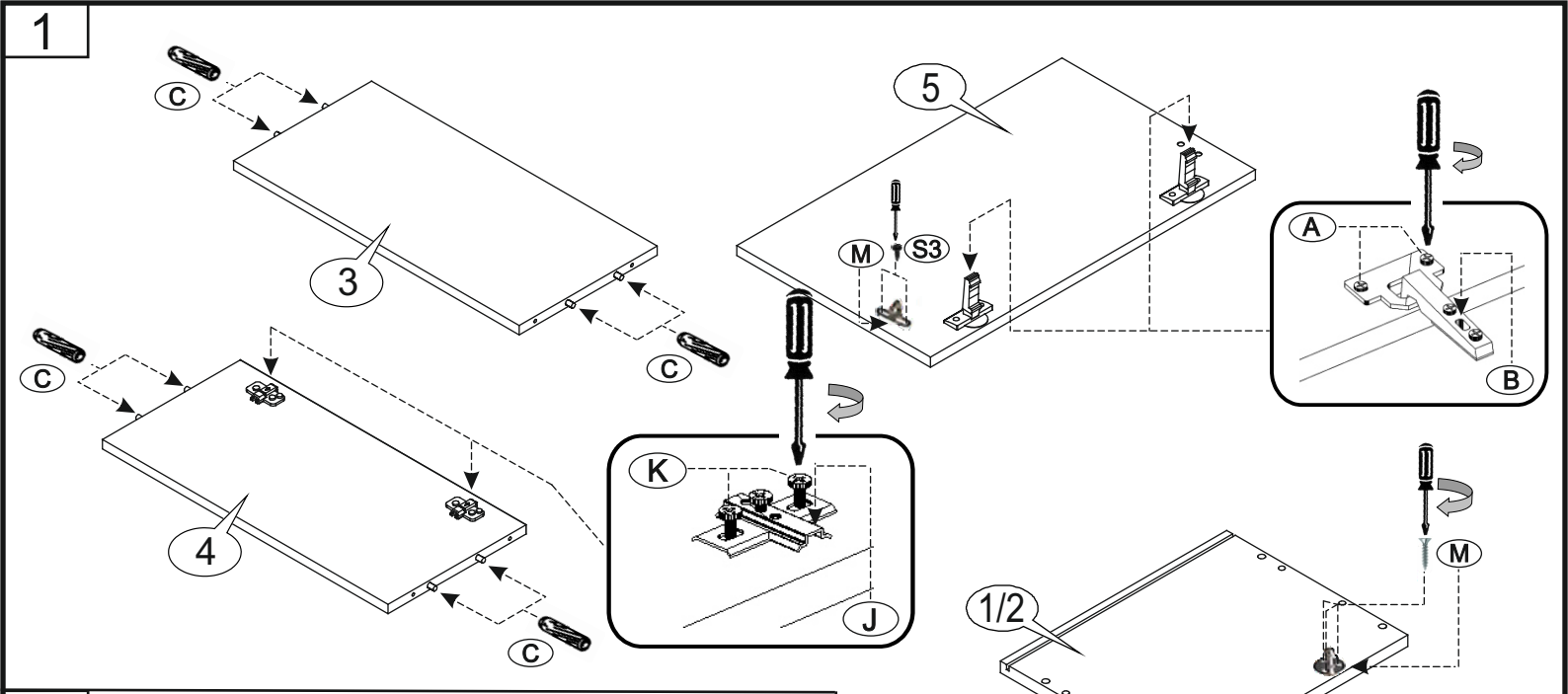
C
3
C
C
4
C
5
M
S3
A
B
K
J
1/2
M

2

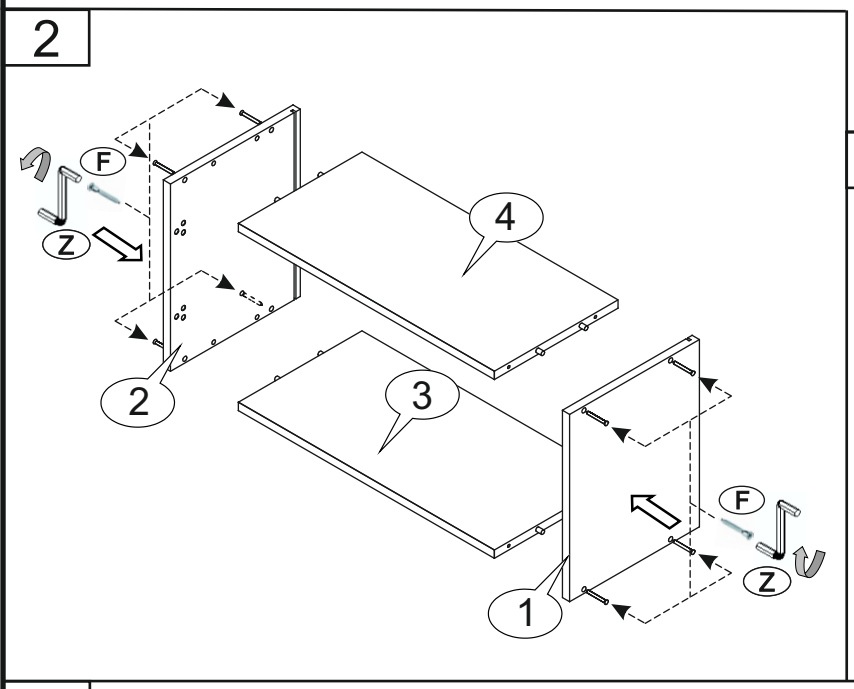
F
Z
4
2
3
F
Z
1

3

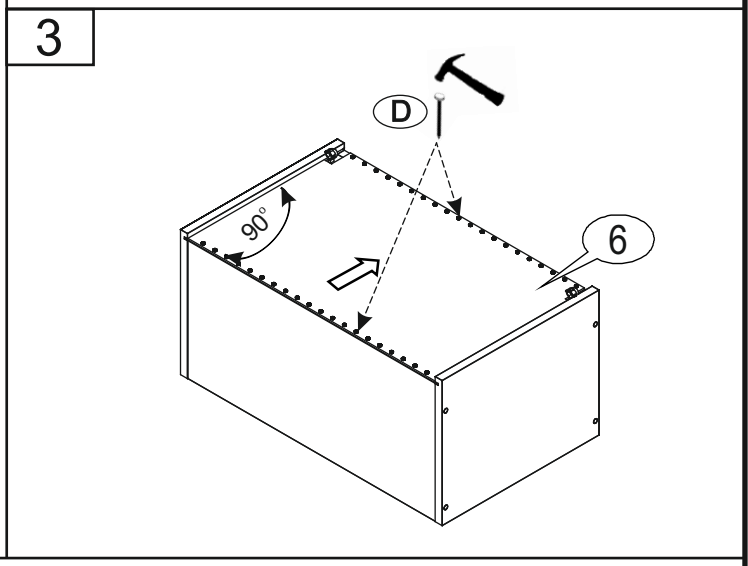
D
90°
6

4

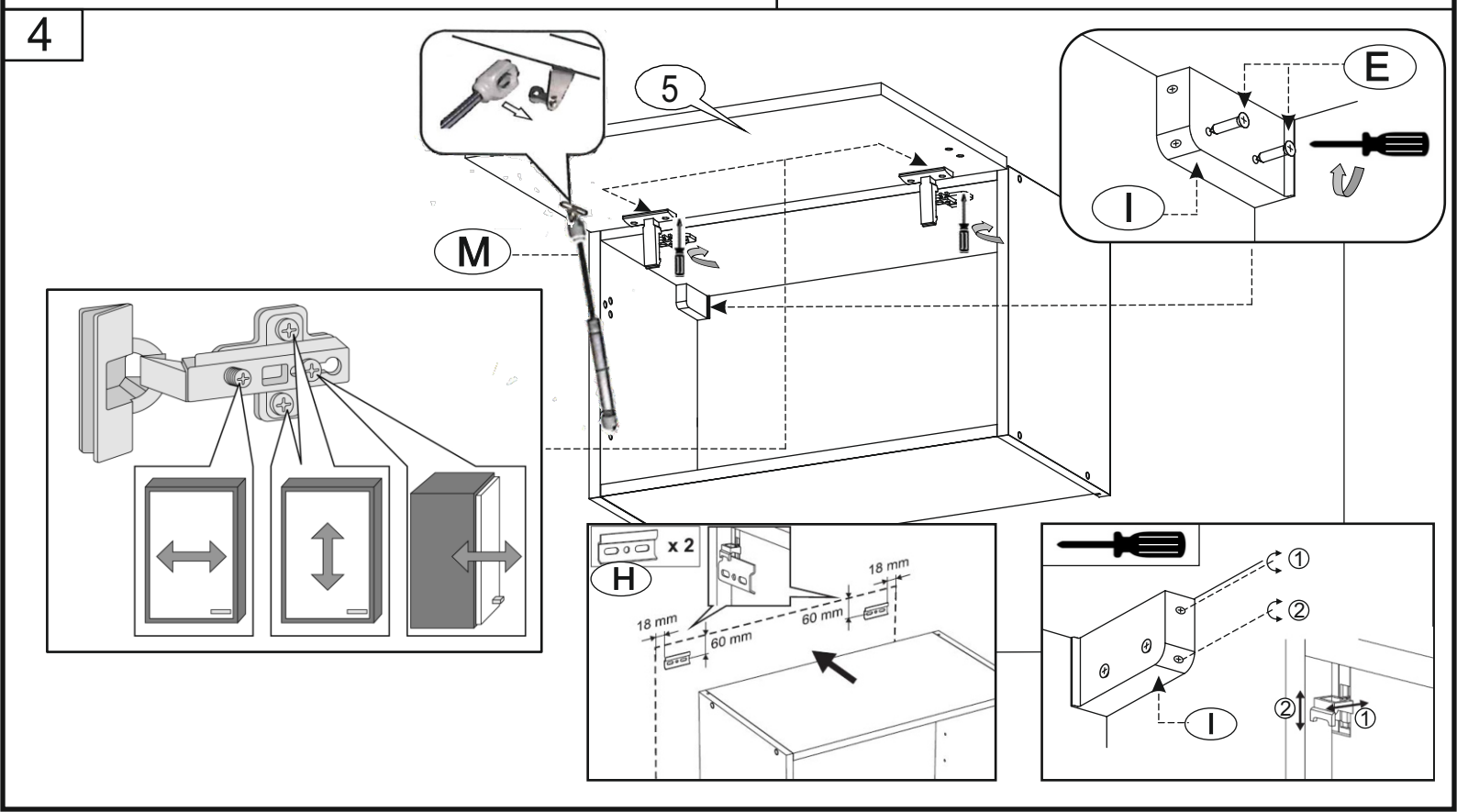
5
M
E
I
x 2
H
18 mm
60 mm
18 mm
60 mm
①
②
I
②
①