EASY 20__EY TYP 07

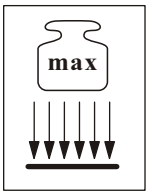

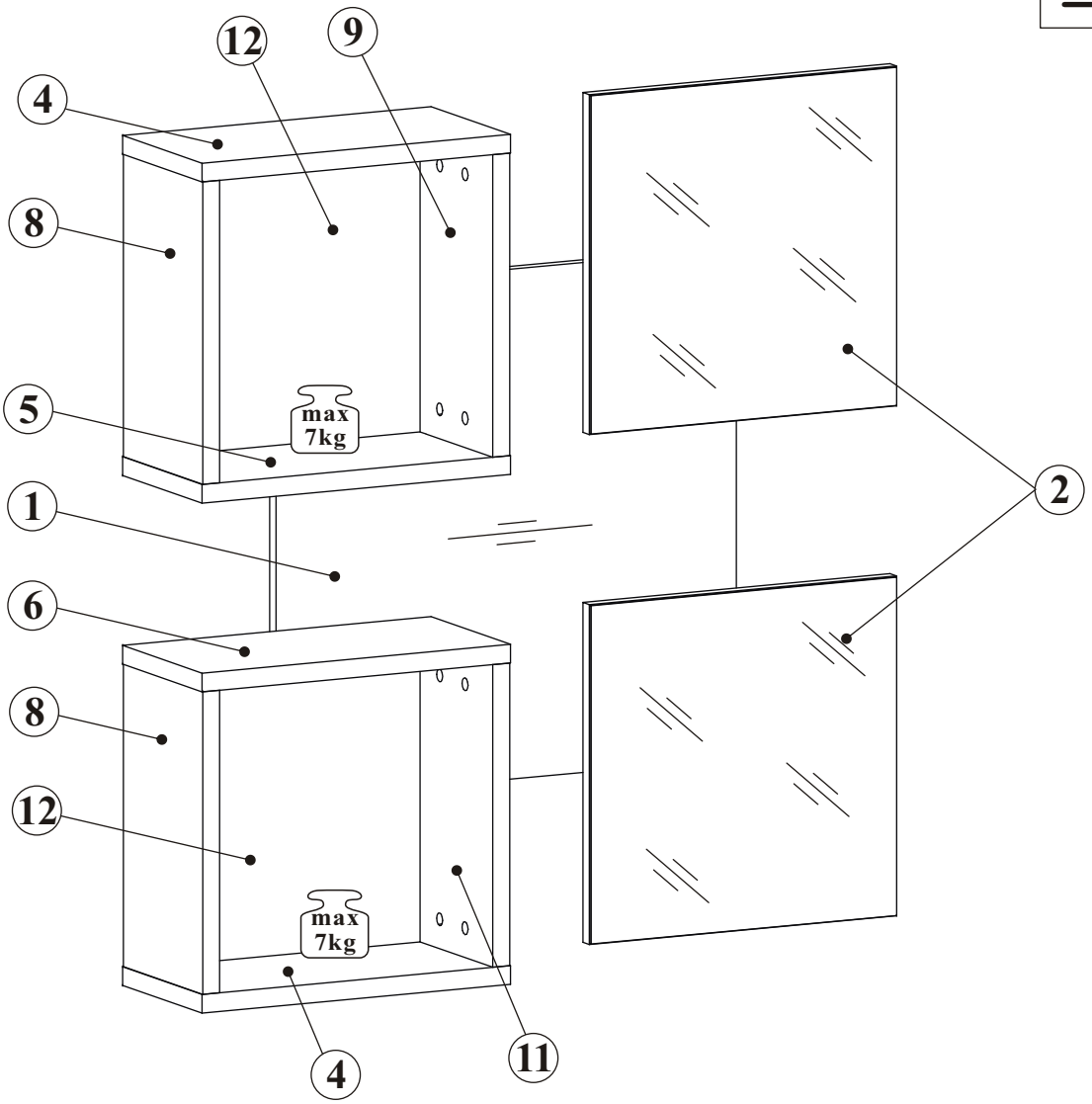

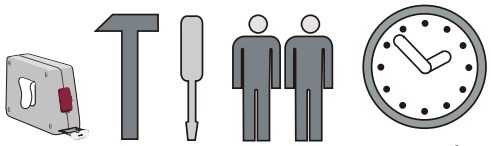

60 min

NO	Dim.			Col.-No	Qty
1	600	600	16	1	1
2	400	400	19	1	2
4	402	200	22	1	2
5	402	200	22	1	1
6	402	200	22	1	1
8	356	200	22	1	2
9	356	200	22	1	1
11	356	200	22	1	1
12	356	356	16	1	2

EASY 20__EY TYP 07

A1 x32	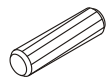 ø8x36	B4 x32	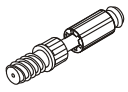	B5 x16	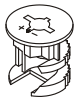 Ø15x12	B16 x16	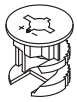 Ø15x16	G5 x32		UP6 x4	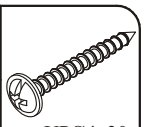 UPØ4x30
B13 x8	Ø7x70	B12 x8	Ø7x32	G4 x16		ZM1 x4		D20 x8	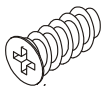 ESØ6x9,5	KR3 x4	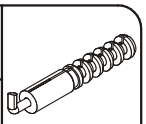 Ø10
G2 x1											

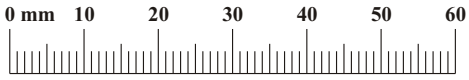

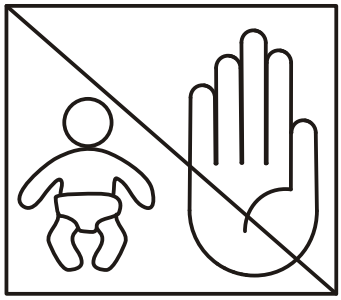

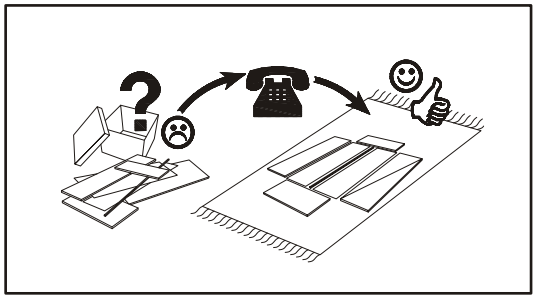

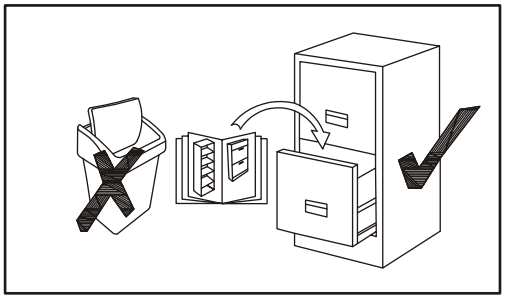

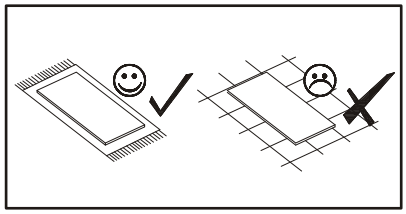

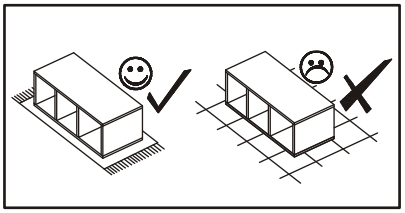

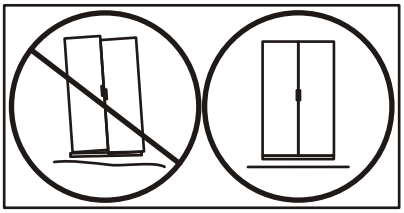

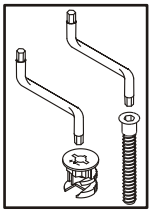

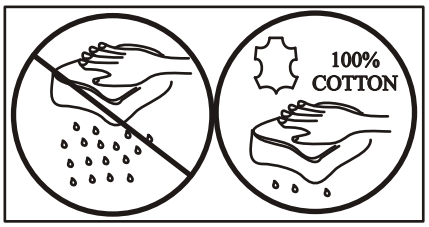

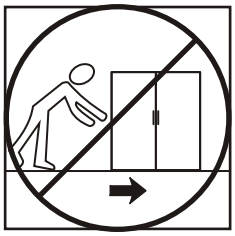

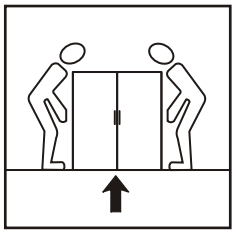

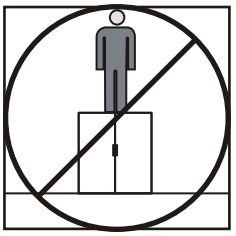

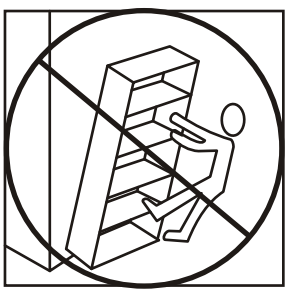

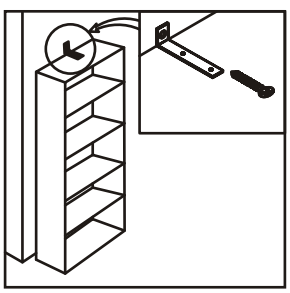

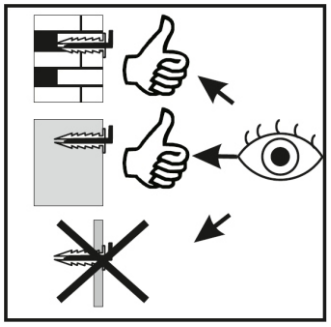

EASY 20__EY TYP 07

ZM1	D20
x4	x8

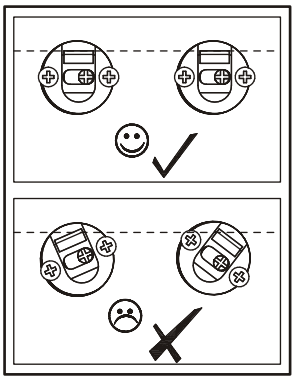

1

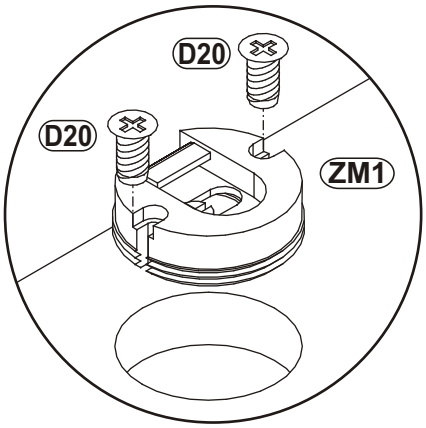

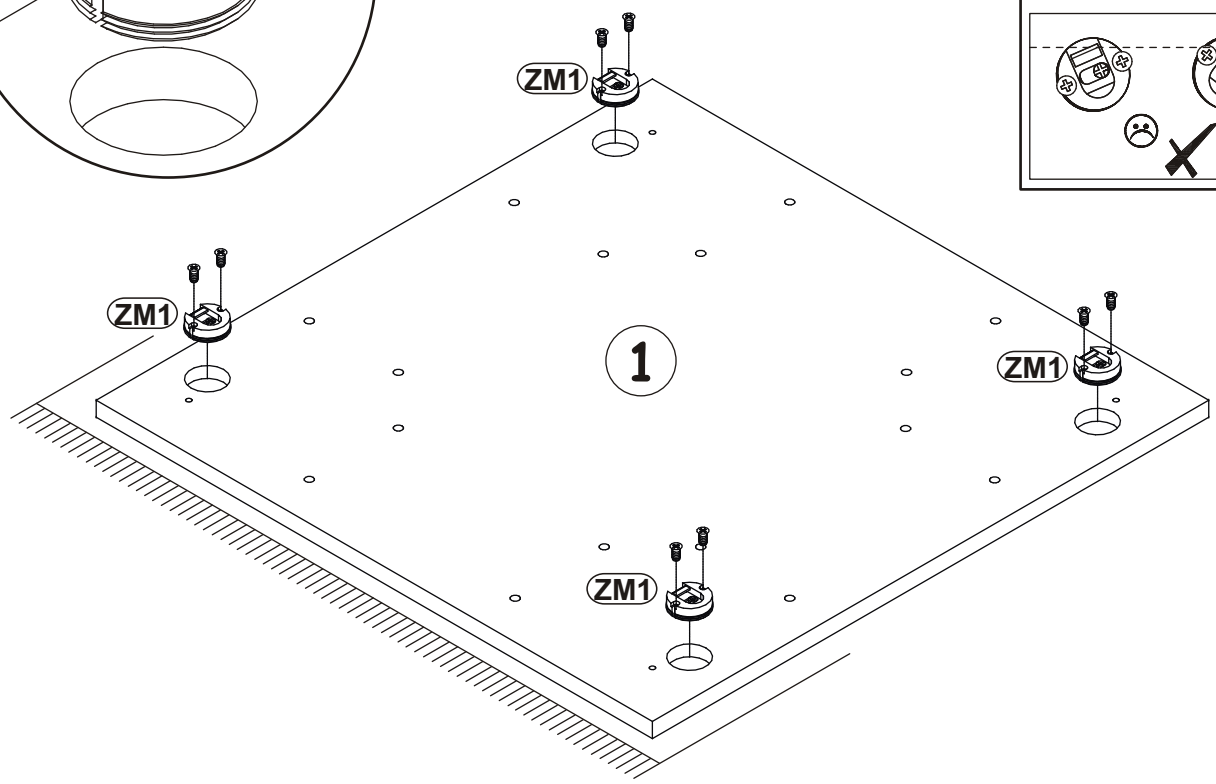

2

A1	B5
x16	x16

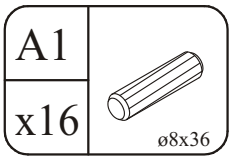

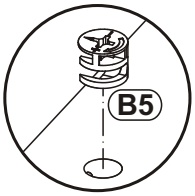

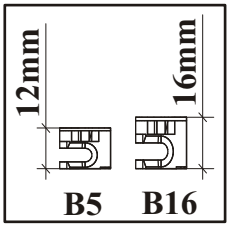

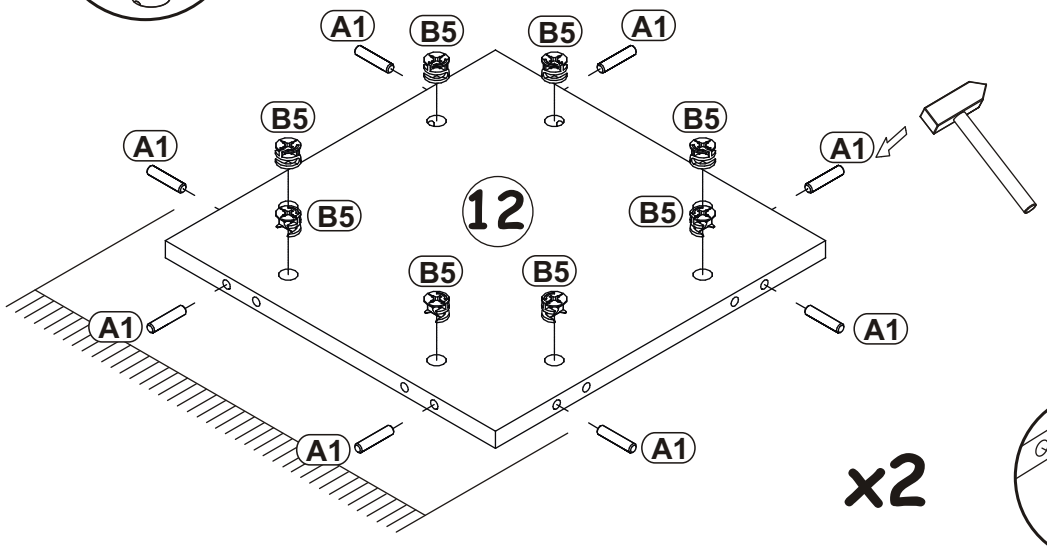

x2

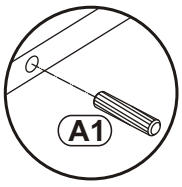

3

A1	B4	B16
x16	x8	x16
ø8x36		Ø15x16

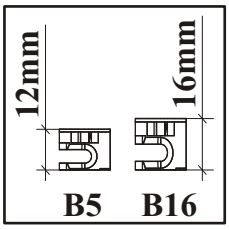

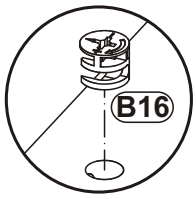

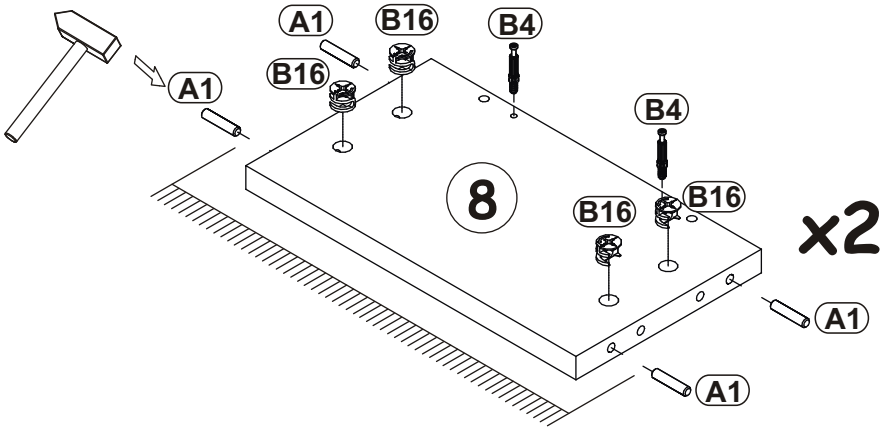

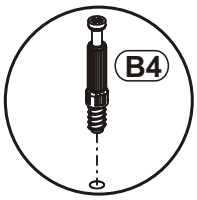

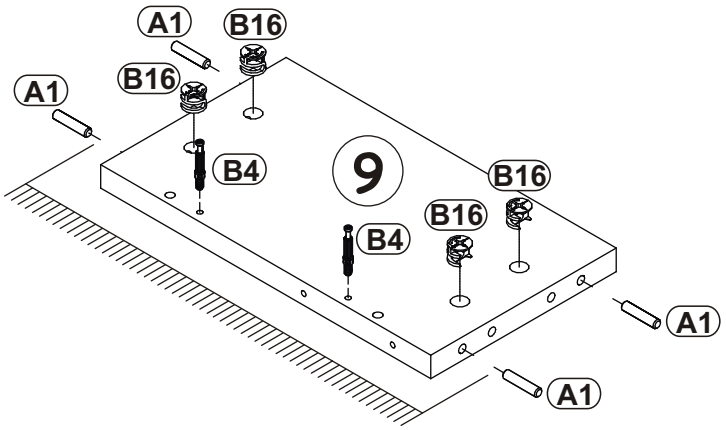

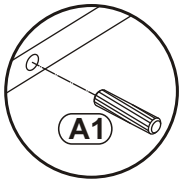

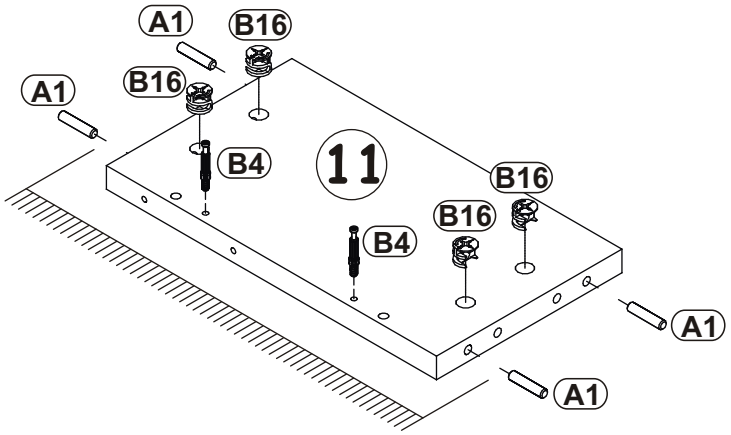

EASY 20__EY TYP 07

B4 x24

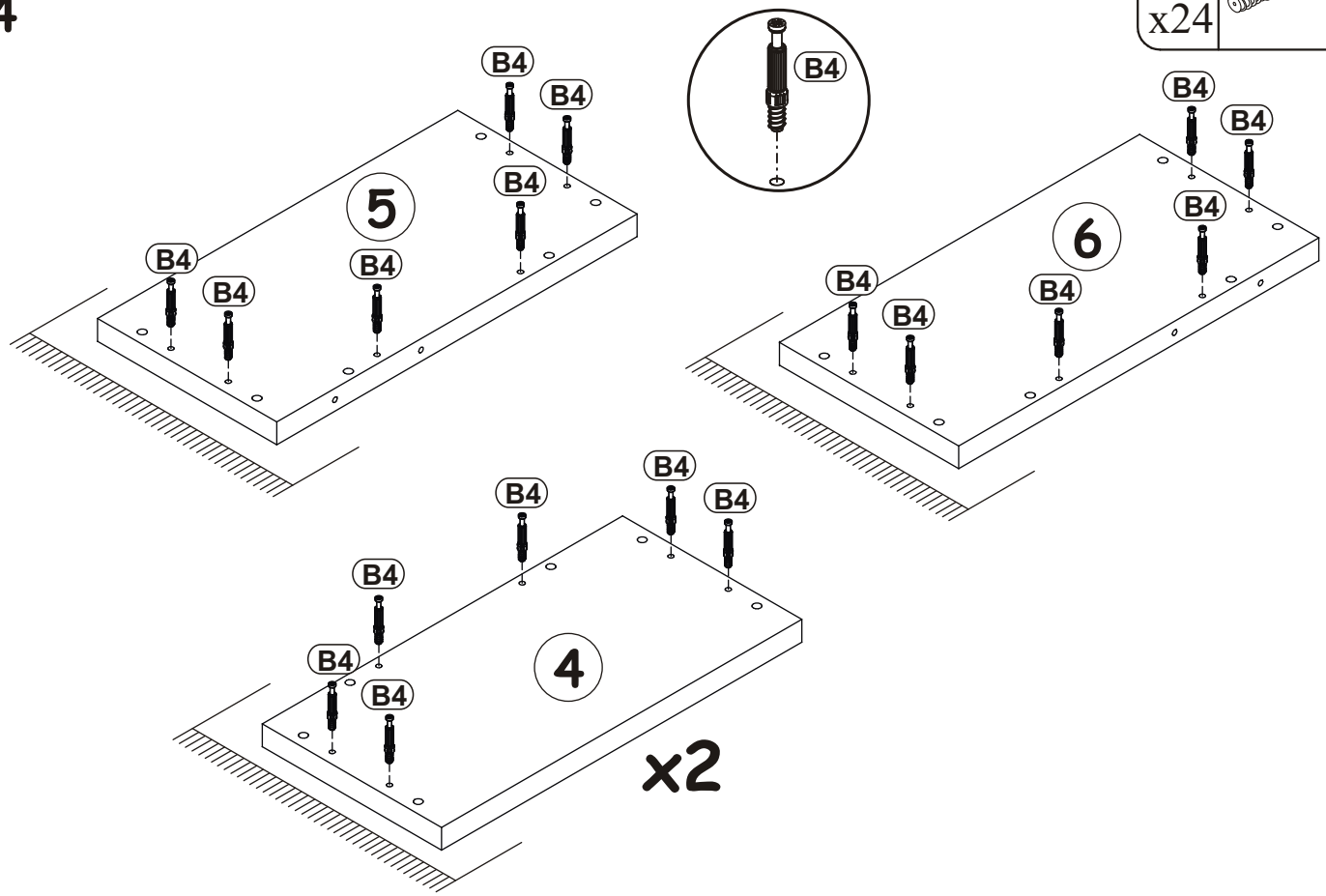

G5 x8

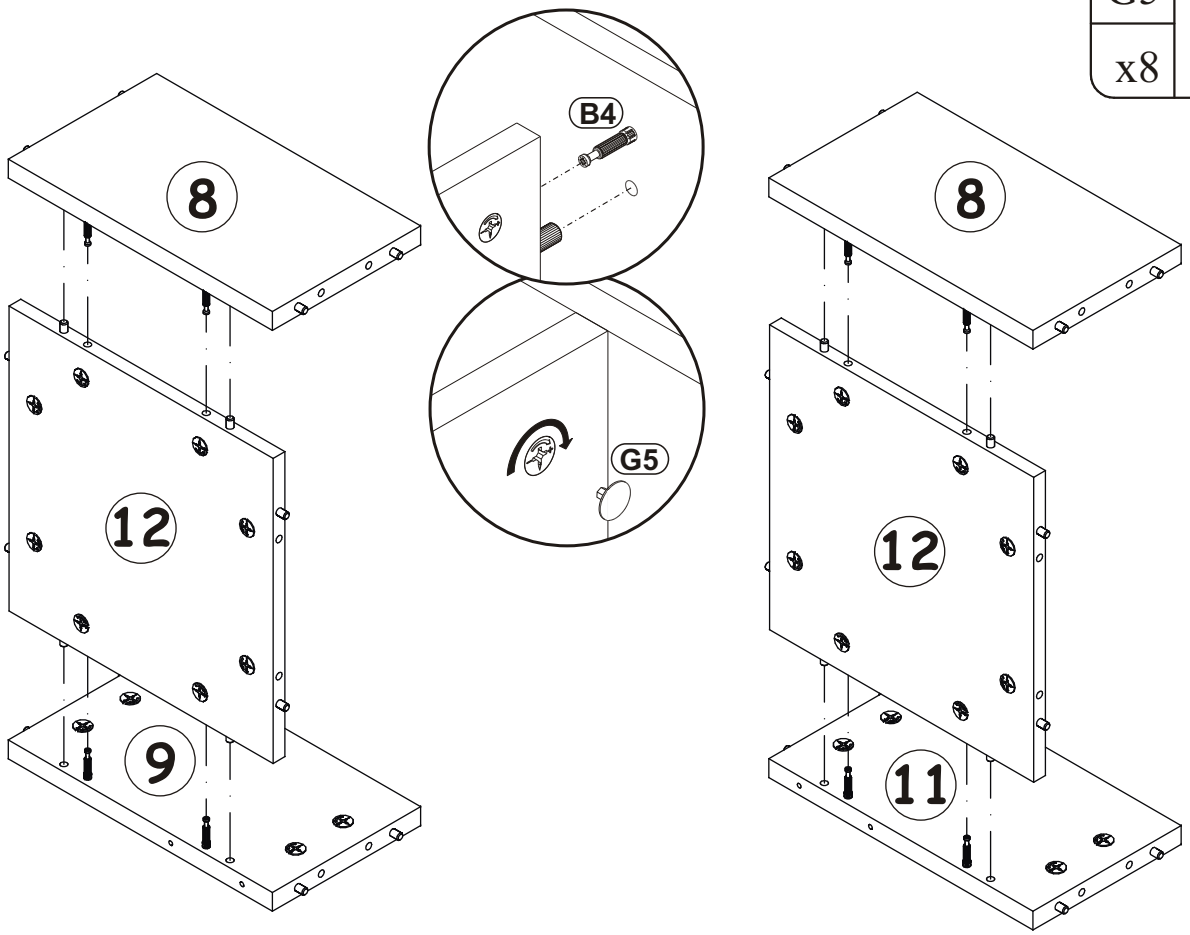

6

G5
x24

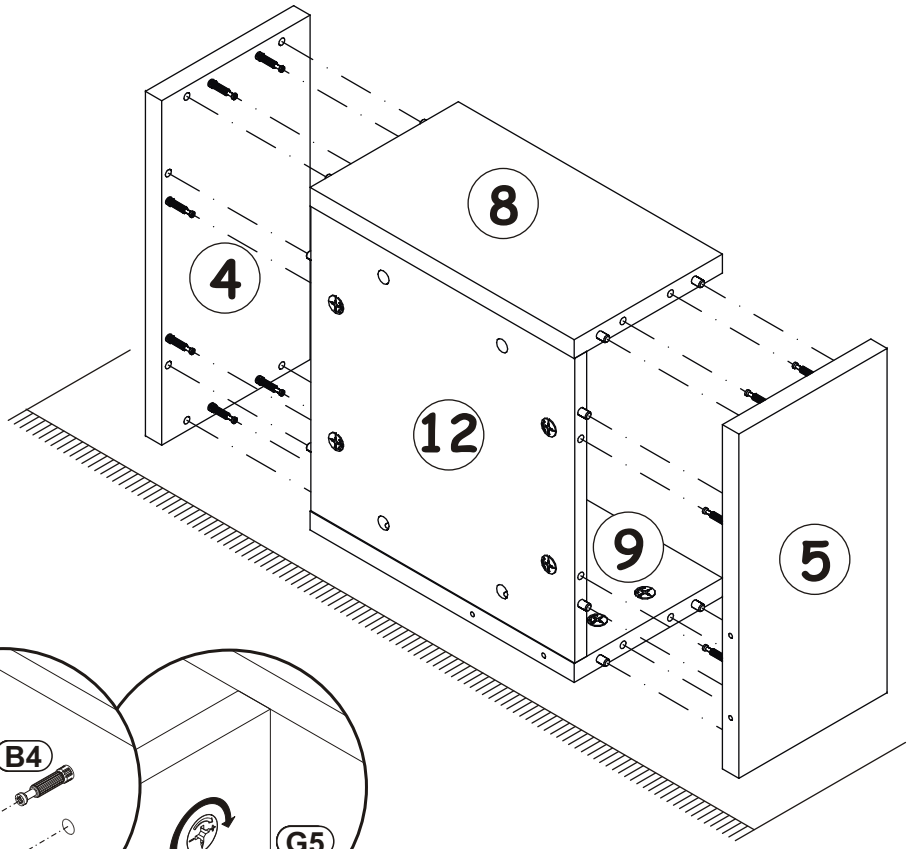

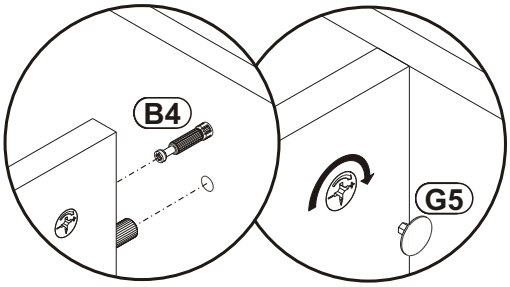

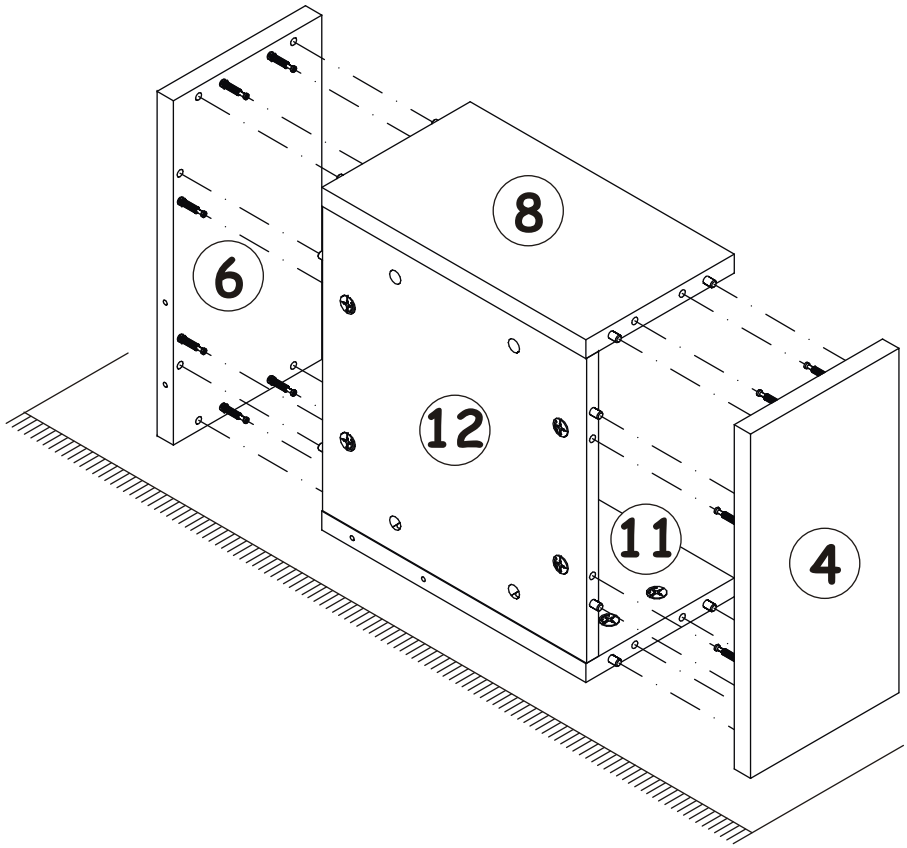

7

B13	x8	Ø7x70

G4	x8

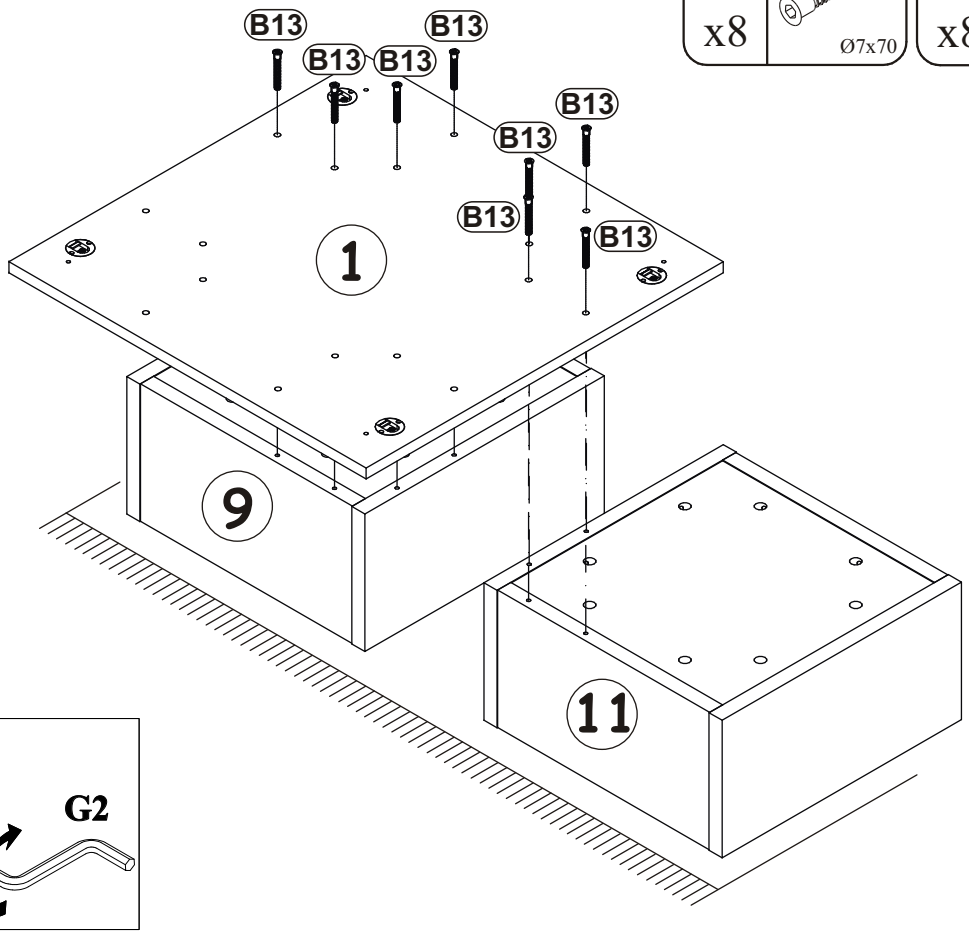

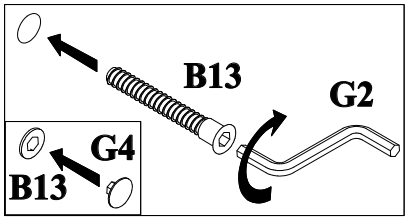

8

B12	x8	Ø7x32

G4	x8

UP6	x4	UPØ4x30

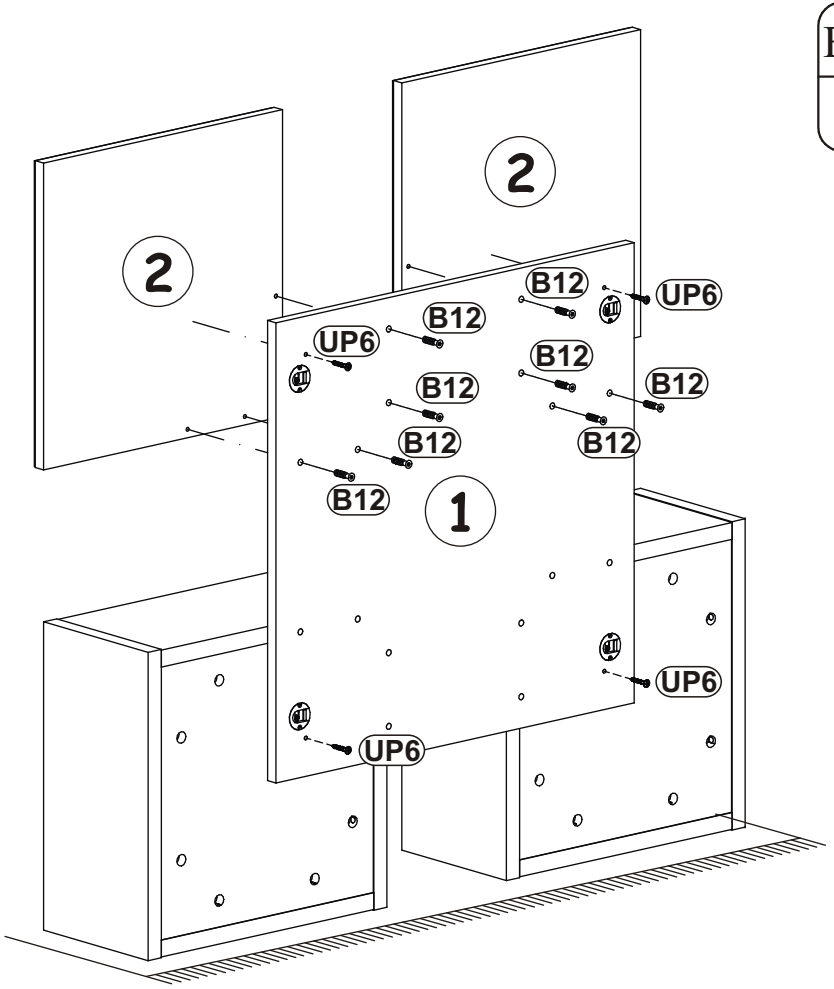

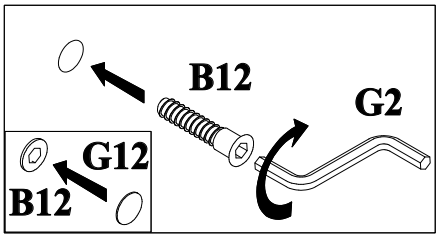

9

KR3
x4
Ø10

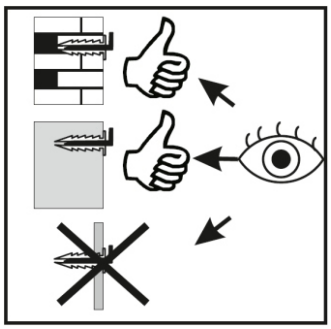

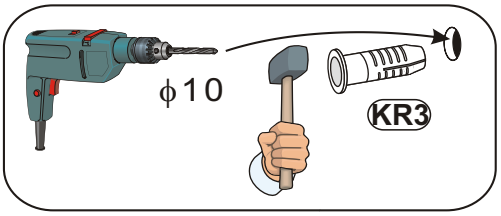

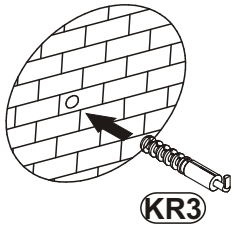

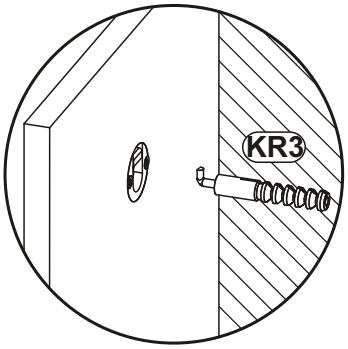

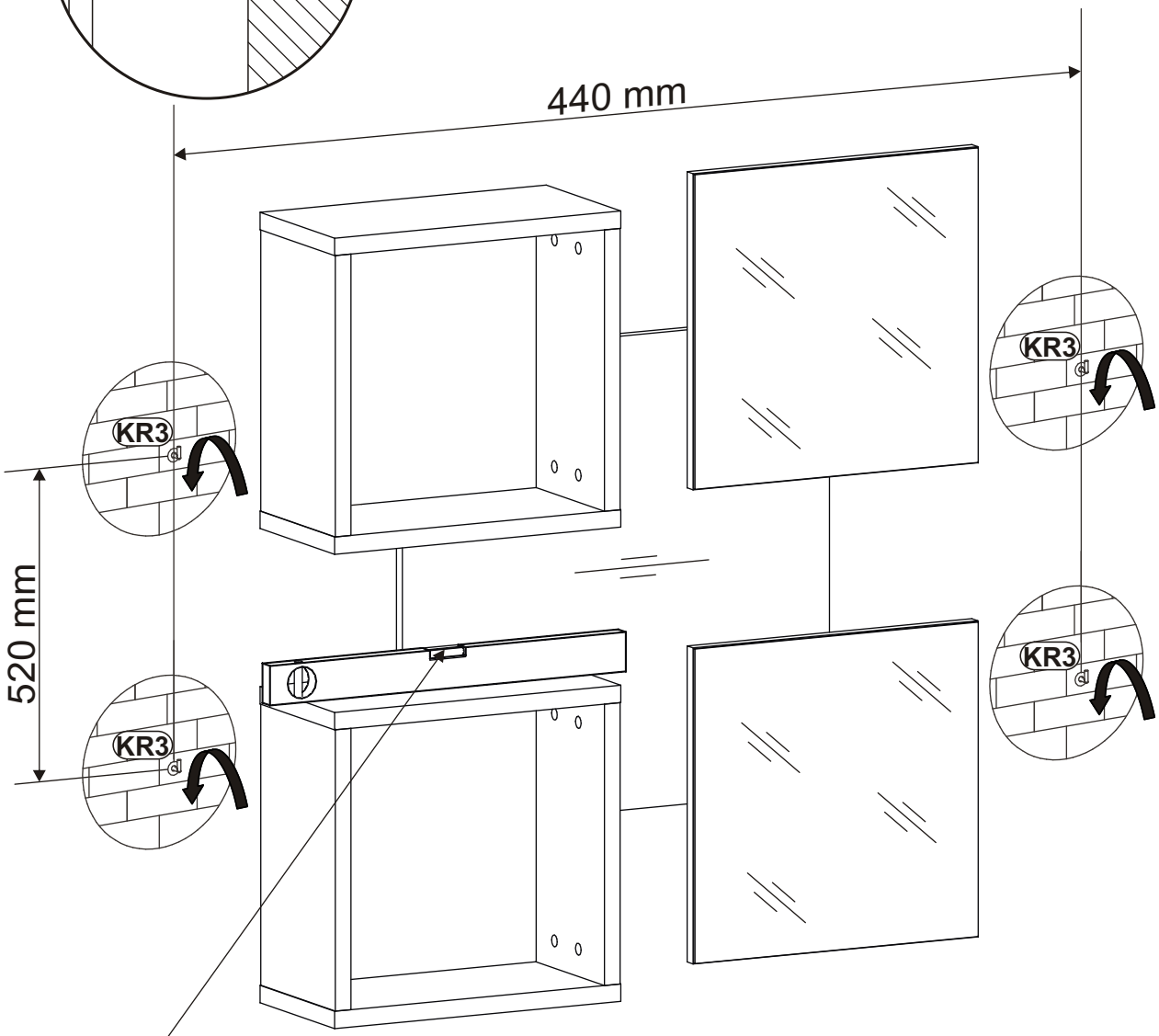

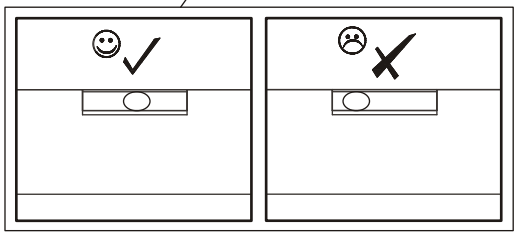

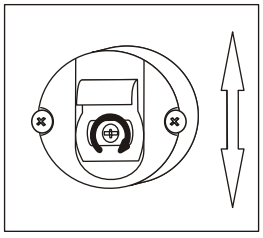

EASY 20__EY TYP 08

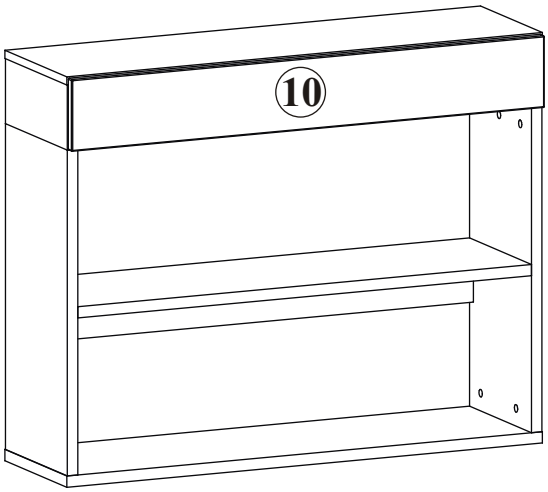

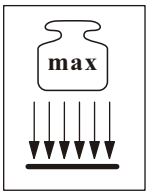

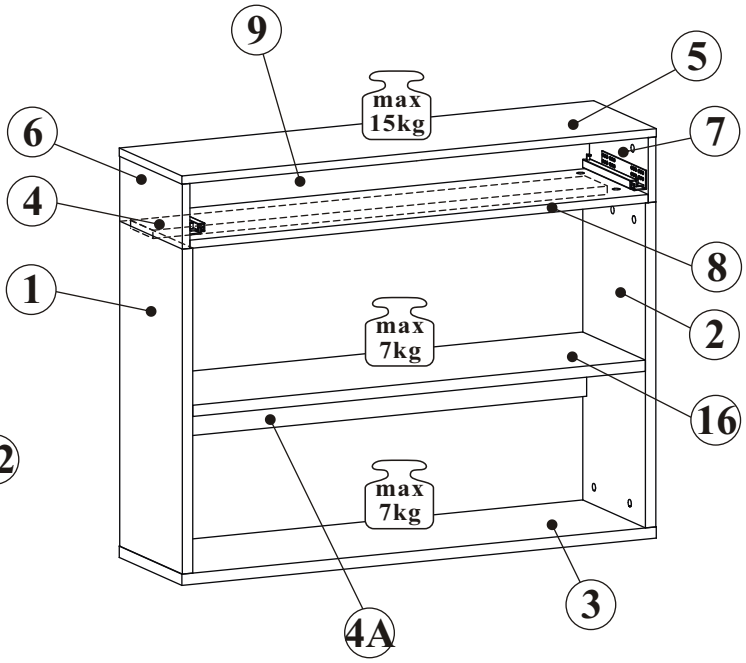

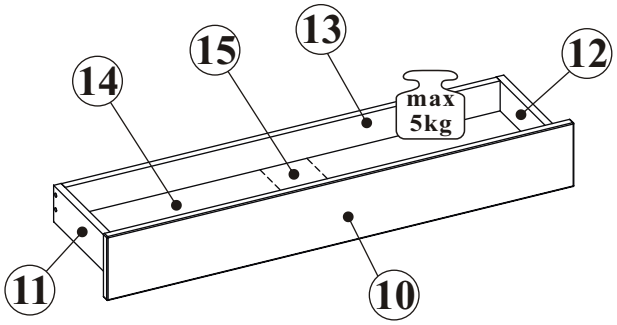

NO	Dim.			Col.-No	Qty
1	635	280	22	1	1
2	635	280	22	1	1
3	1002	280	22	1	1
4	956	100	16	1	1
4A	956	100	16	1	1
5	1002	280	16	1	1
6	127	280	16	1	1
7	127	280	16	1	1
8	968	280	16	1	1
9	968	111	16	1	1
10	996	140	16	1	1
11	250	80	16	1	1
12	250	80	16	1	1
13	928	66	16	1	1
14	254	940	3	1	1
15	250	100	16	1	1
16	956	280	22	1	1

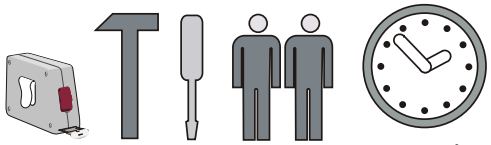

90 min

EASY 20__EY TYP 08

A1 x34 ø8x36	A3 x4 Ø8x47	B4 x26	B5 x26 Ø15x12	B16 x8 Ø15x16	G5 x30
QU x1 L-250mm	D20 x12 ESØ6x9,5	D10 x4 USØ3,5x13	G8 x4 Ø20	UP6 x2 UPØ4x30	B6 x4 Ø7x76
B11 x4 Ø7x50	G4 x4	S1 x2	UP13 x8 UPØ3x16	ZM1 x4	KR3 x4 Ø10
G2 x1					

0 mm 10 20 30 40 50 60

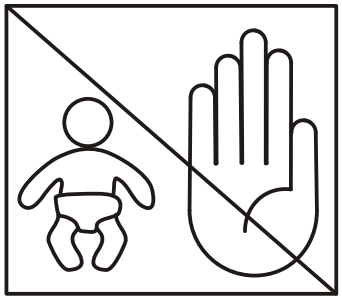
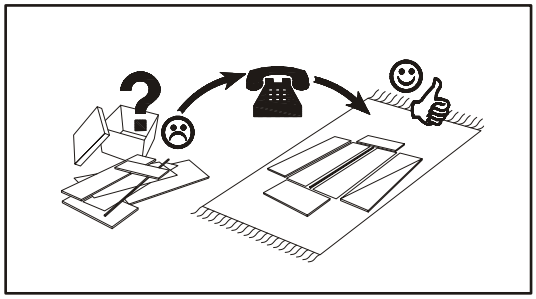
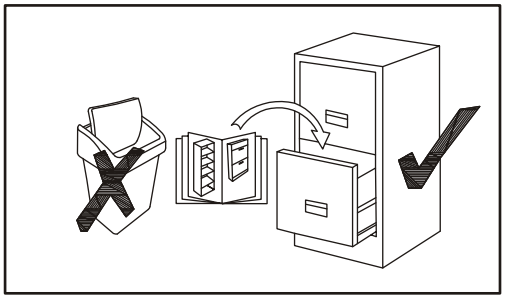
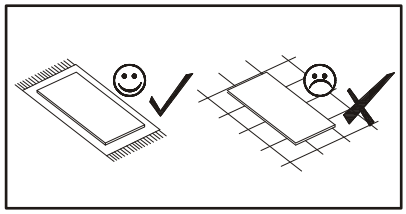
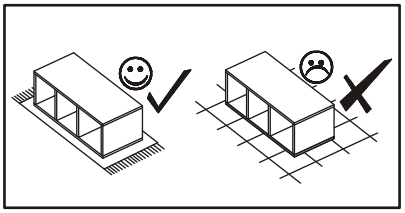
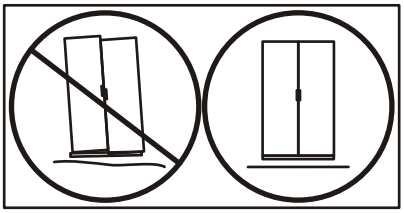
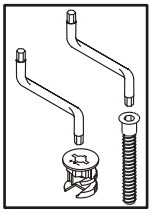
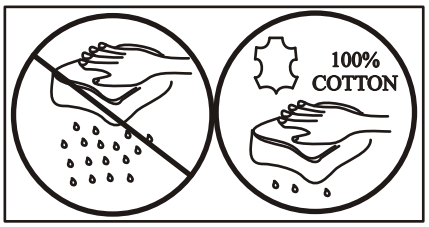

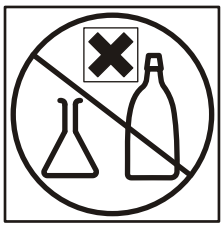
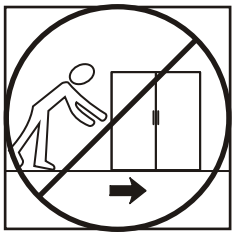
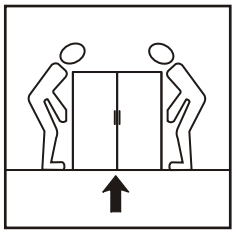
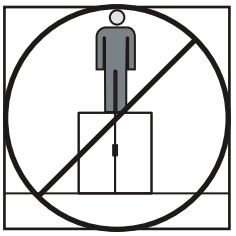
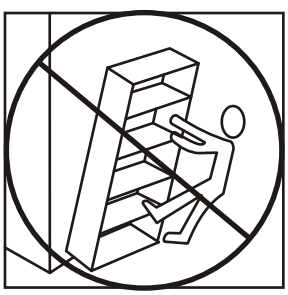
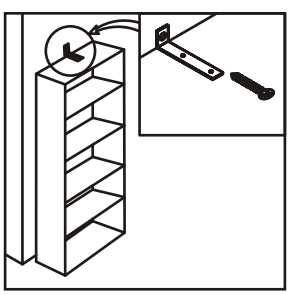

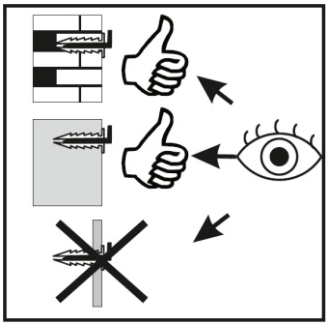

EASY 20__EY TYP 08

1

B4 x10

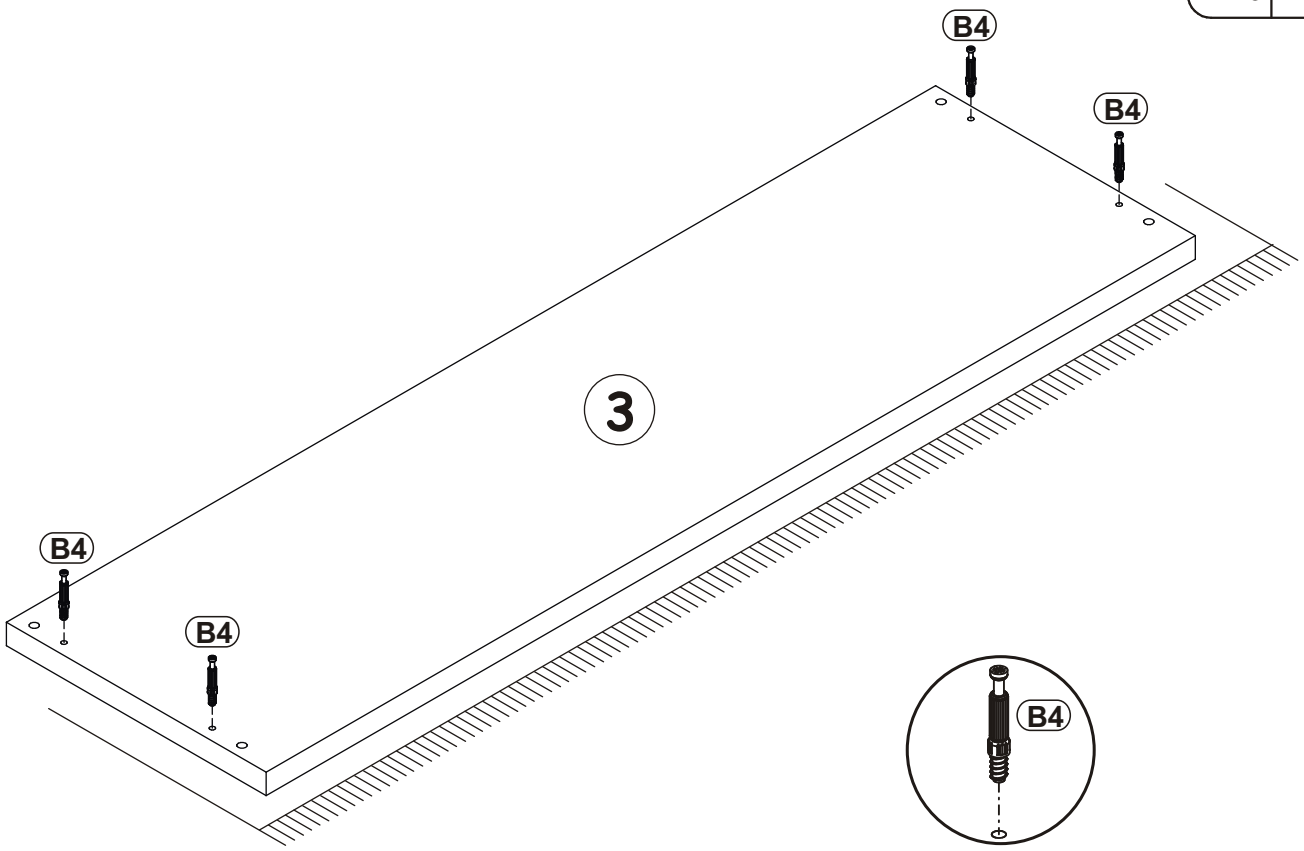

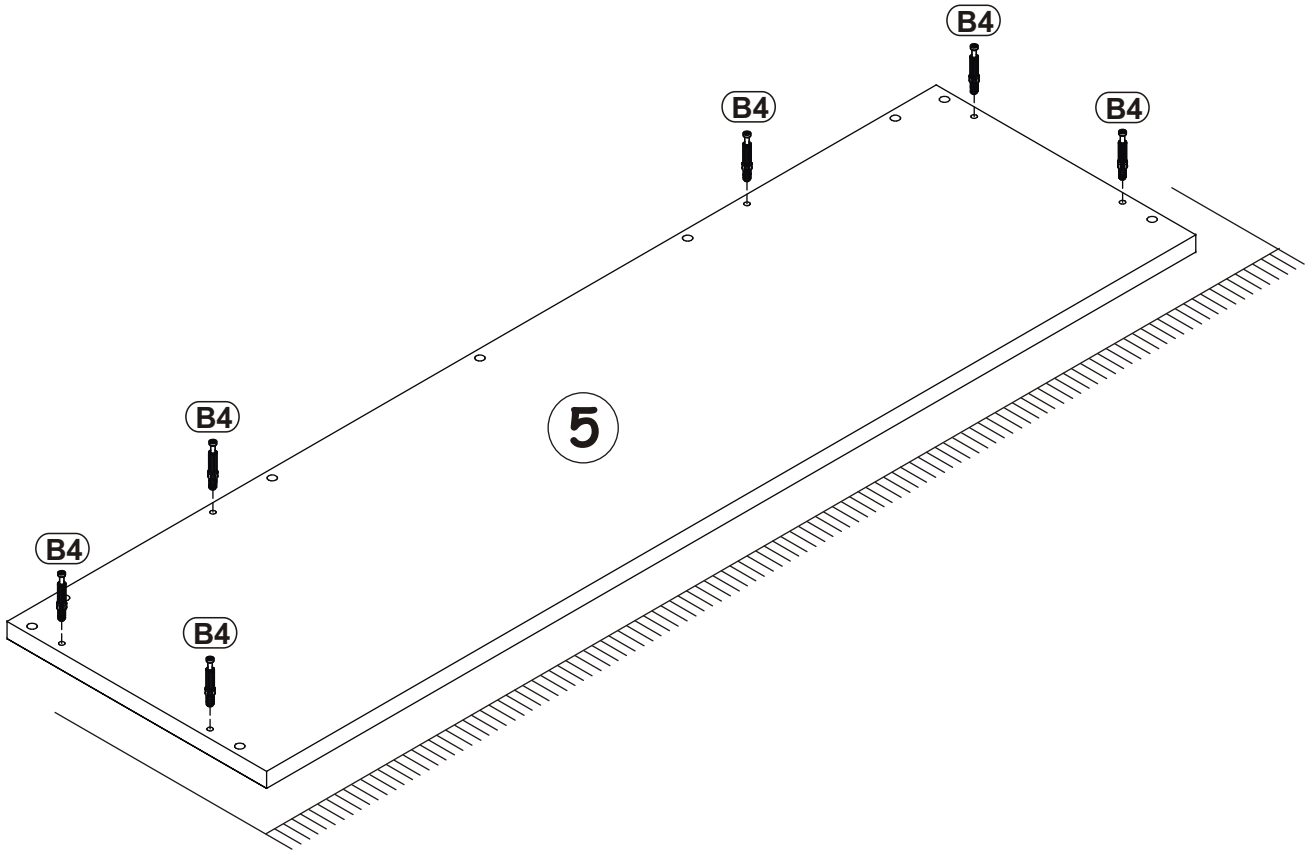

EASY 20__EY TYP 08

2

A1	B5	B4
x4	x4	x2
ø8x36	Ø15x12	

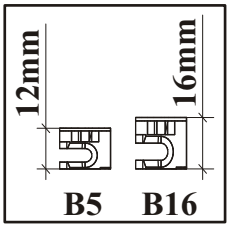

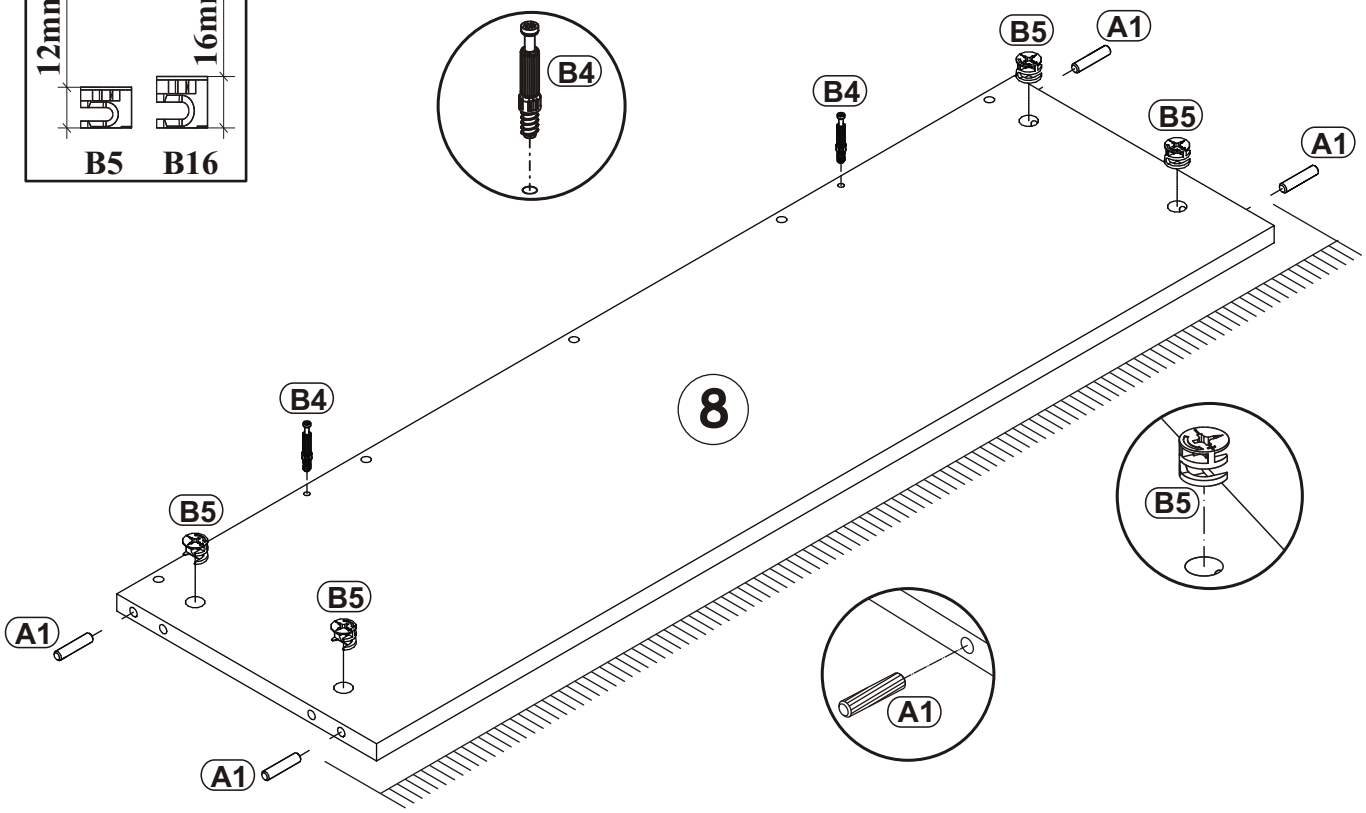

3

A1	B16
x4	x4
ø8x36	Ø15x16

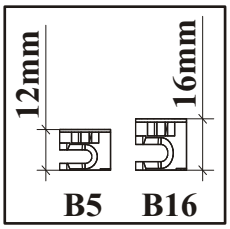

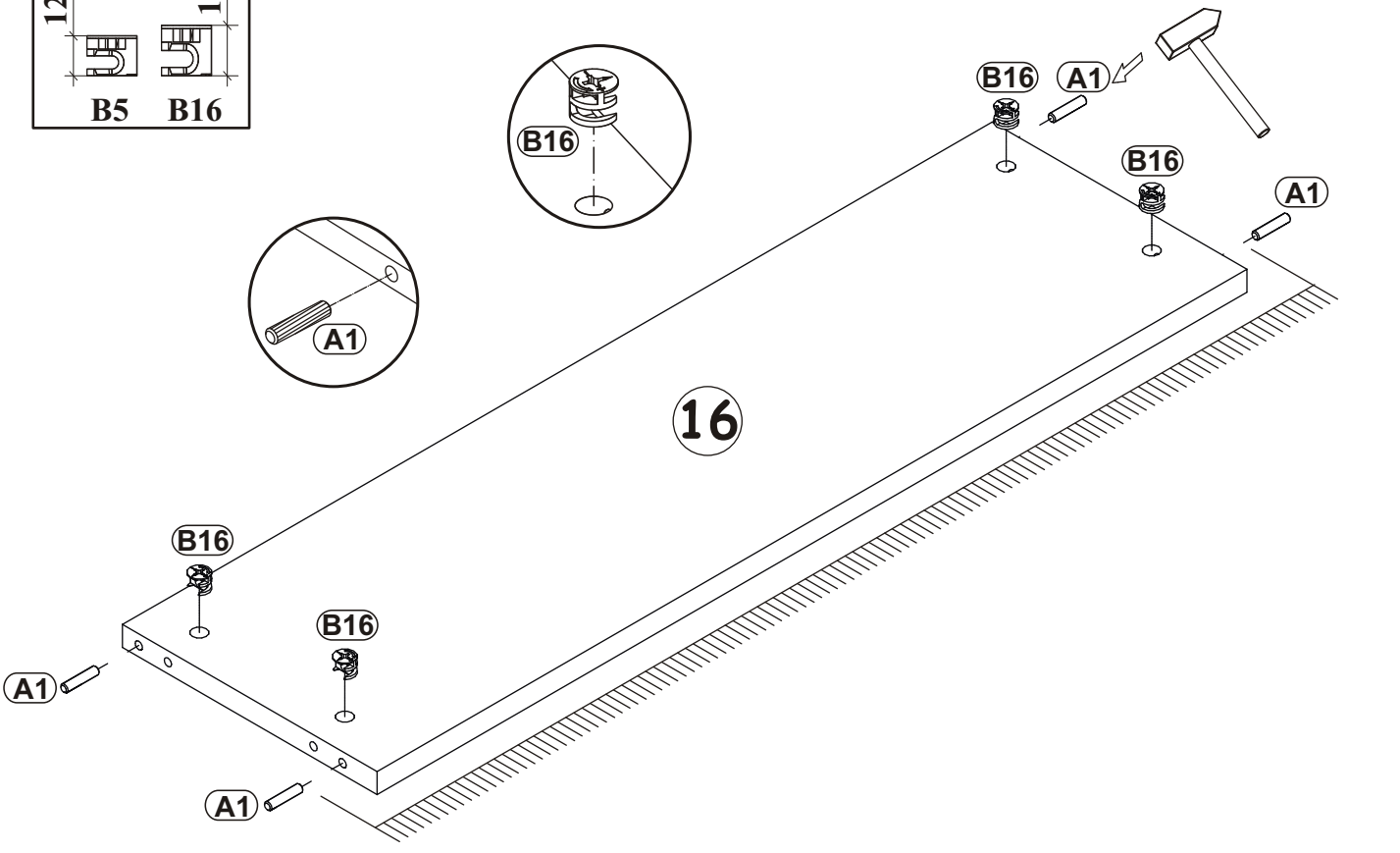

EASY 20__EY TYP 08

4

A3	A1	B4
x4 Ø8x47	x4 ø8x36	x8

B5	B16
x4 Ø15x12	x4 Ø15x16

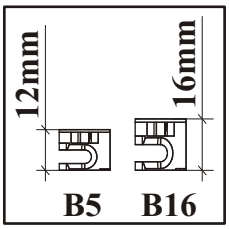

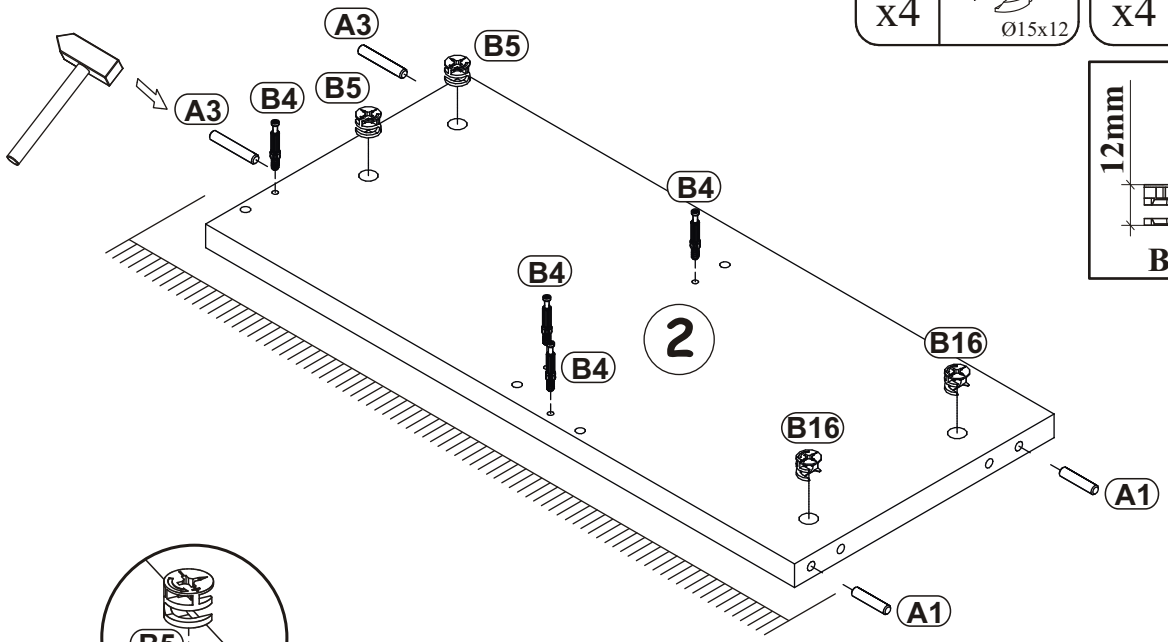

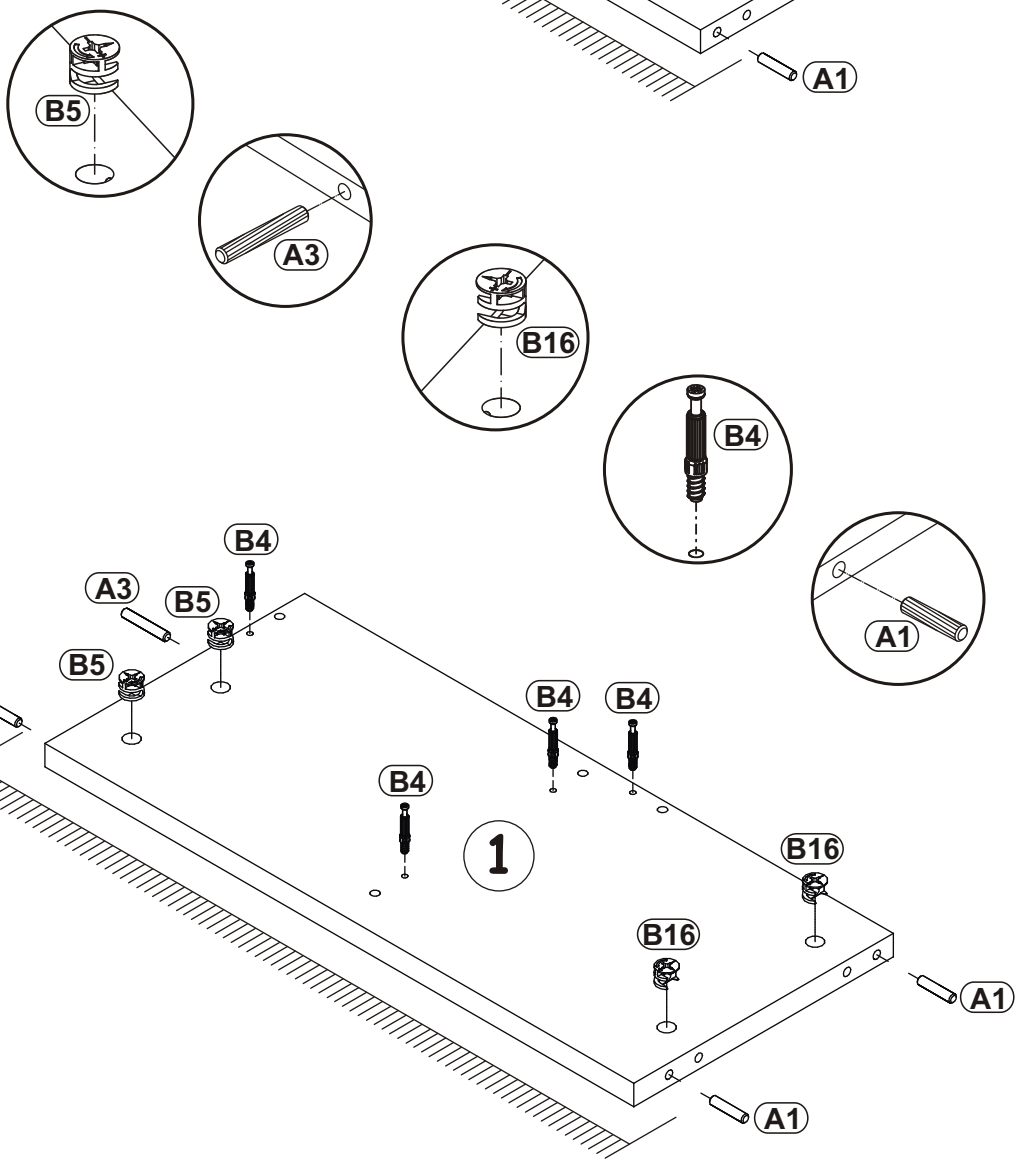

5

A1	x14	ø8x36

B5	x8	Ø15x12

ZM1	x4

D20	x8	ESØ6x9,5

12mm 16mm
B5 B16

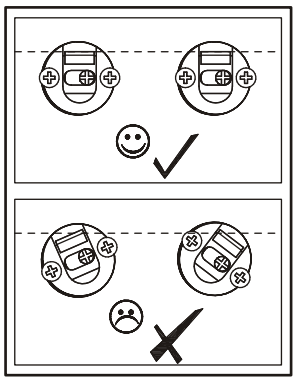

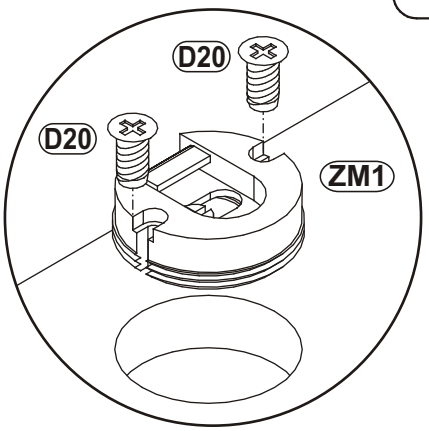

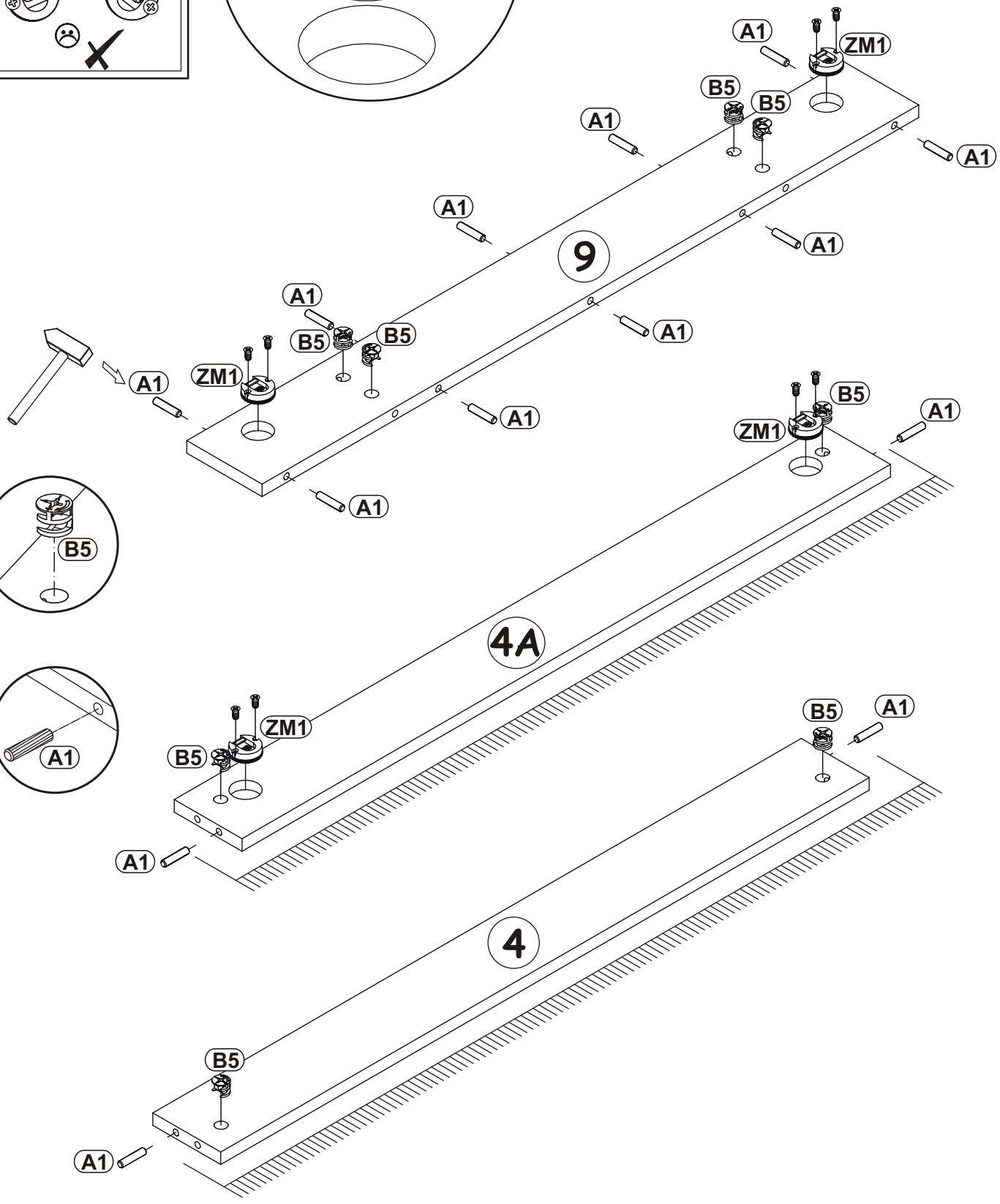

6

A1	B4	B5
x8	x4	x10
ø8x36		Ø15x12

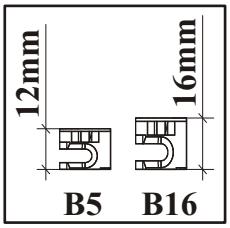

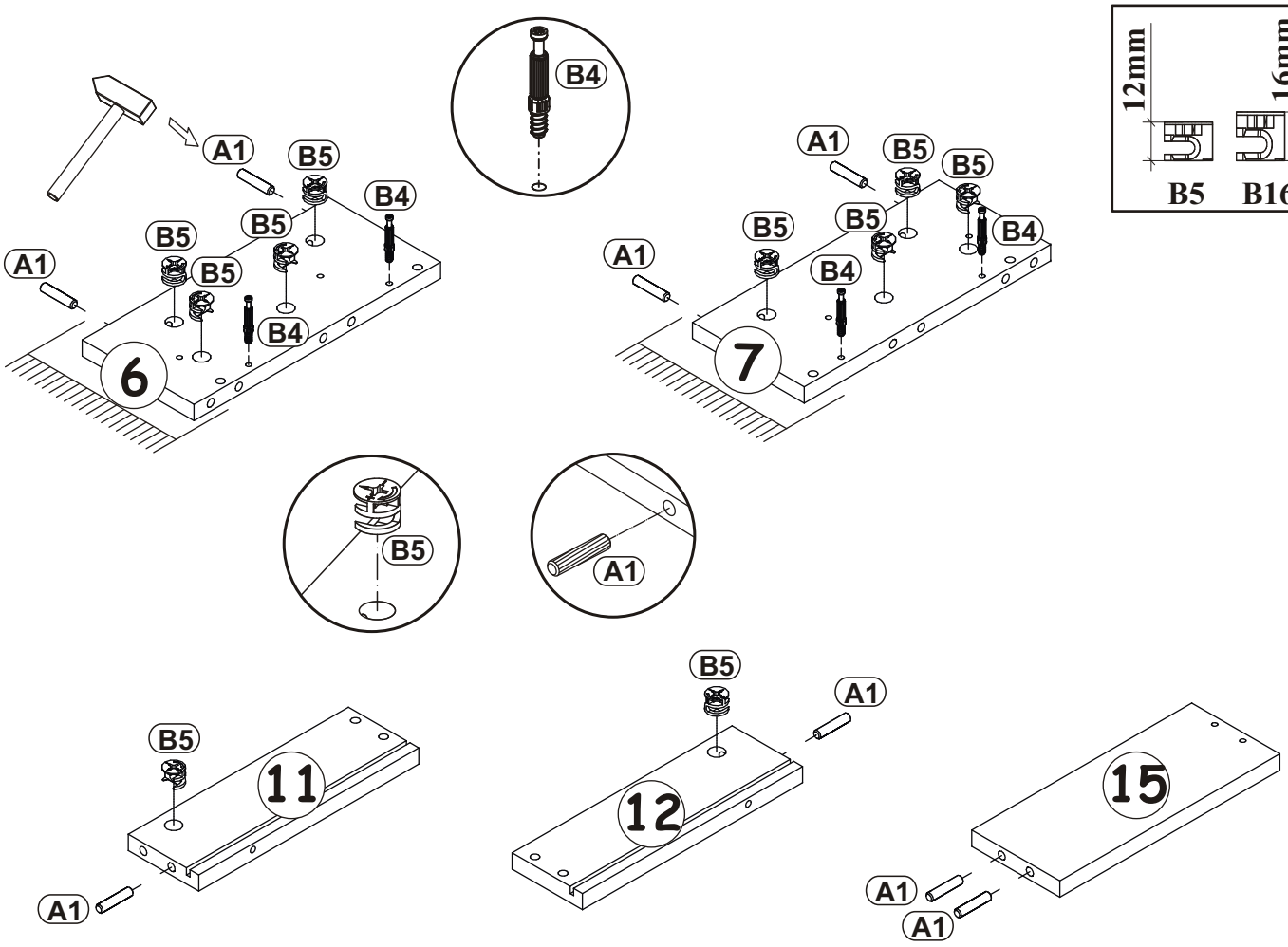

7

B4
x2

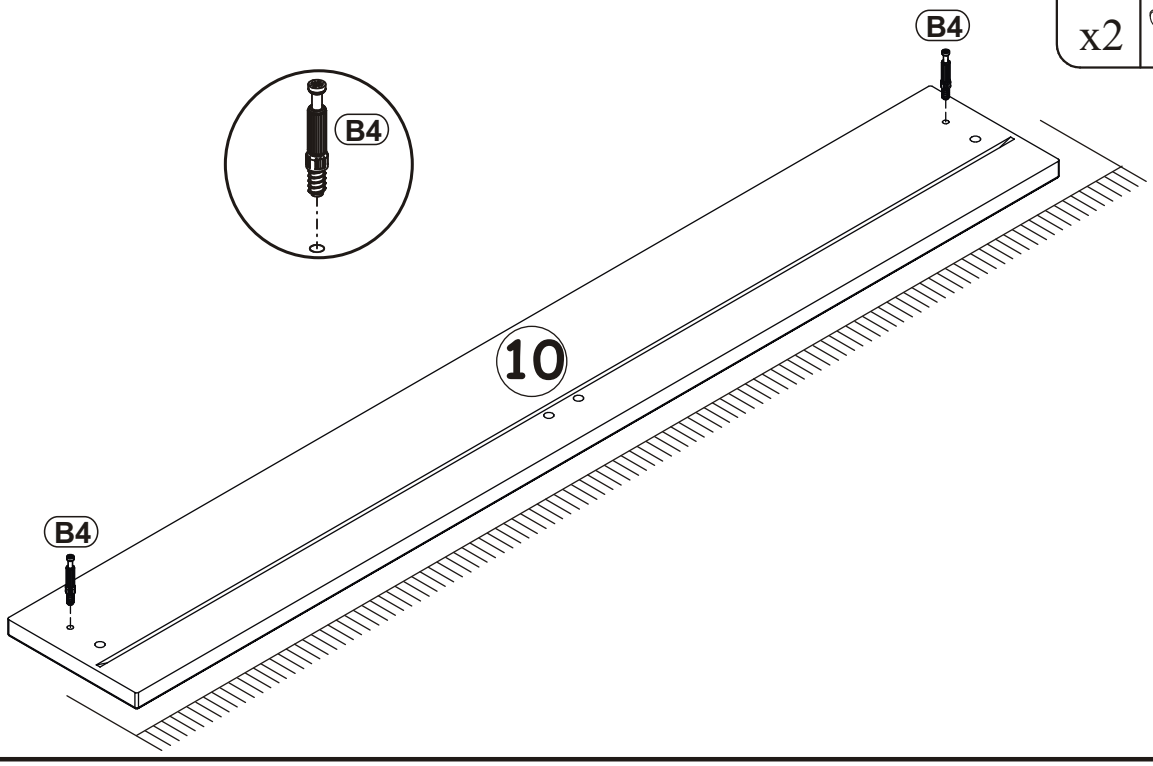

8

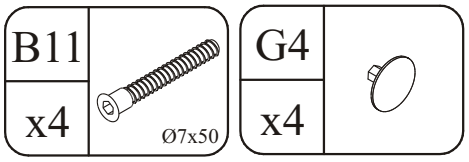
B11
x4
Ø7x50
G4
x4

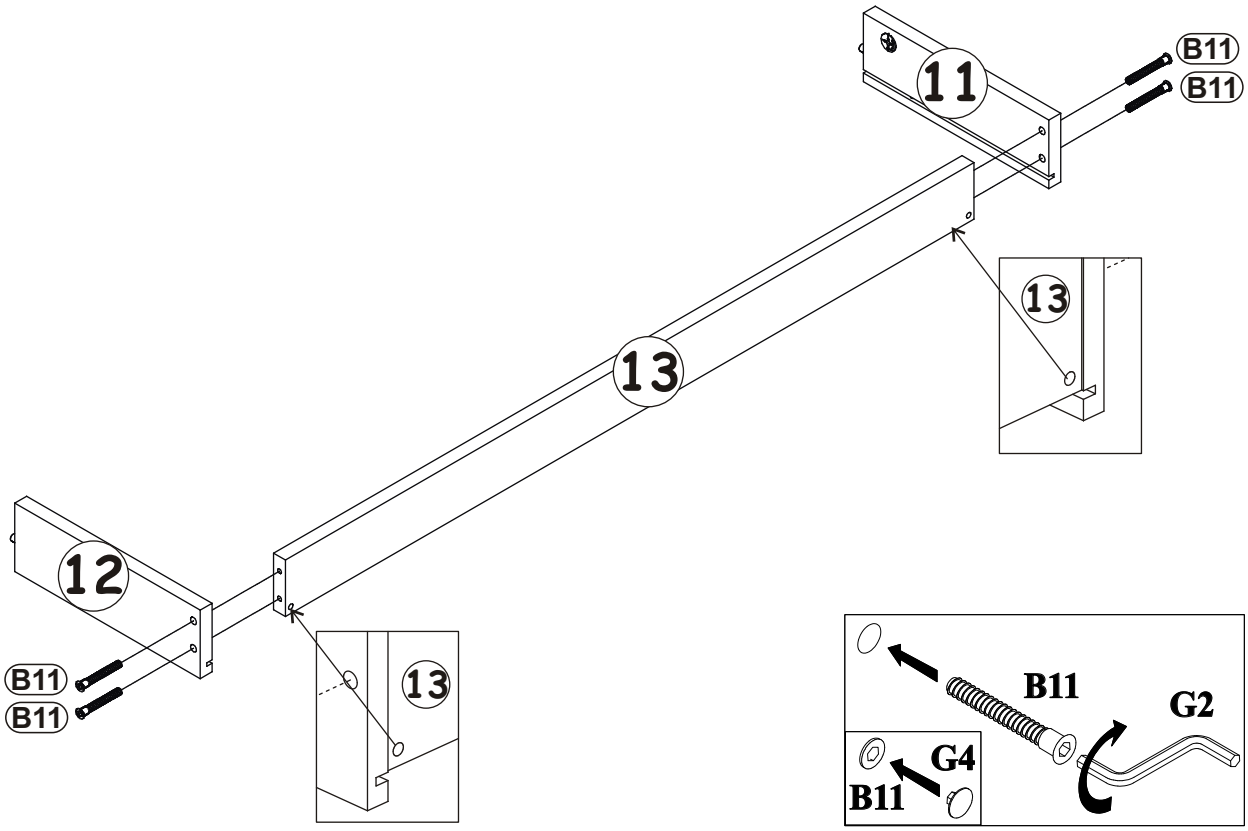
11
B11
B11
13
13
12
B11
B11
13
B11
G2
G4
B11

9

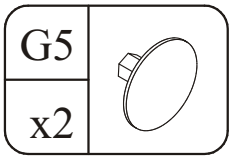
G5
x2

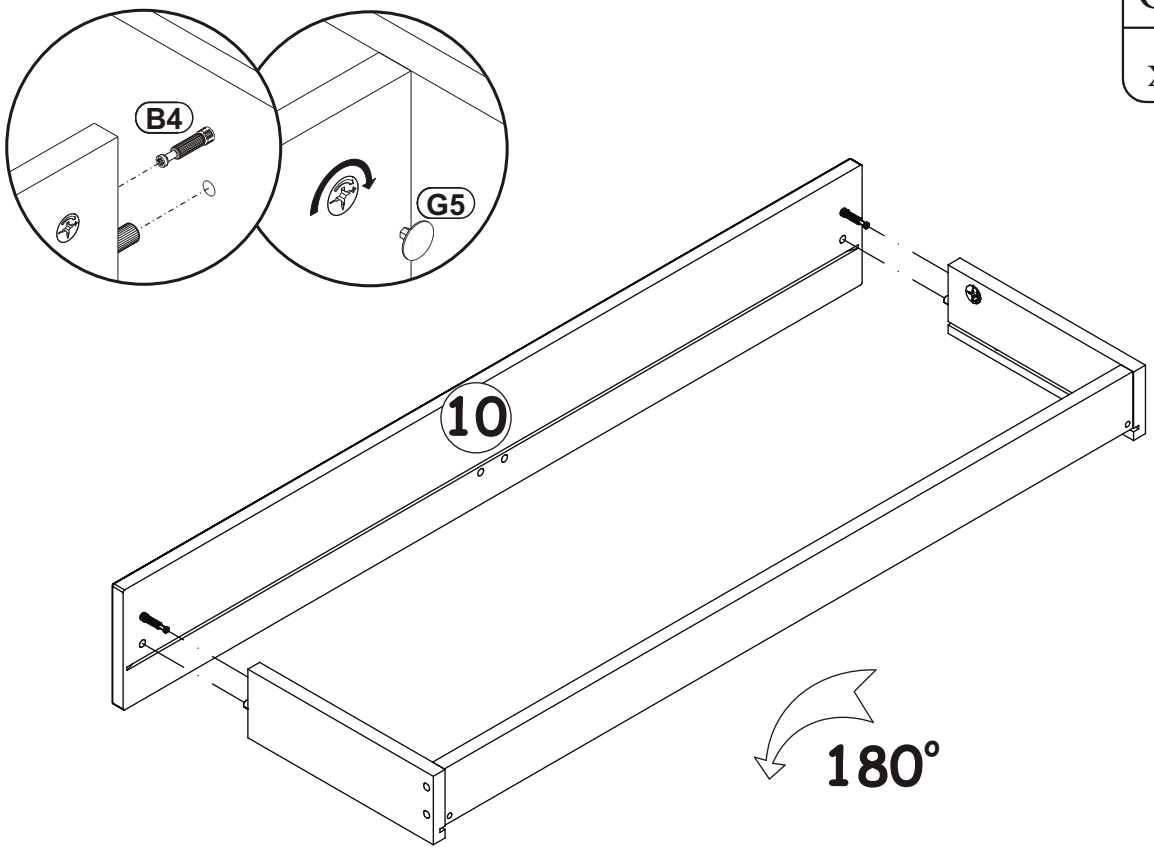
B4
G5
10
180°

10

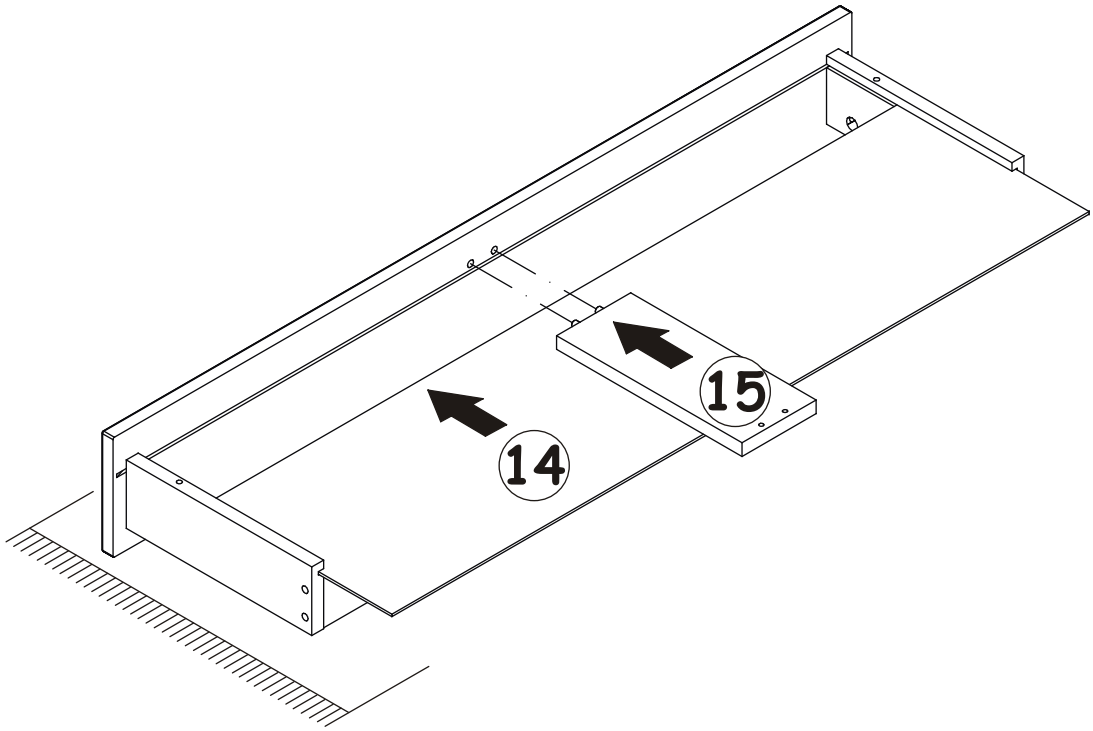

11

S1	UP13	UP6
x2	x8	x2
	UPØ3x16	UPØ4x30

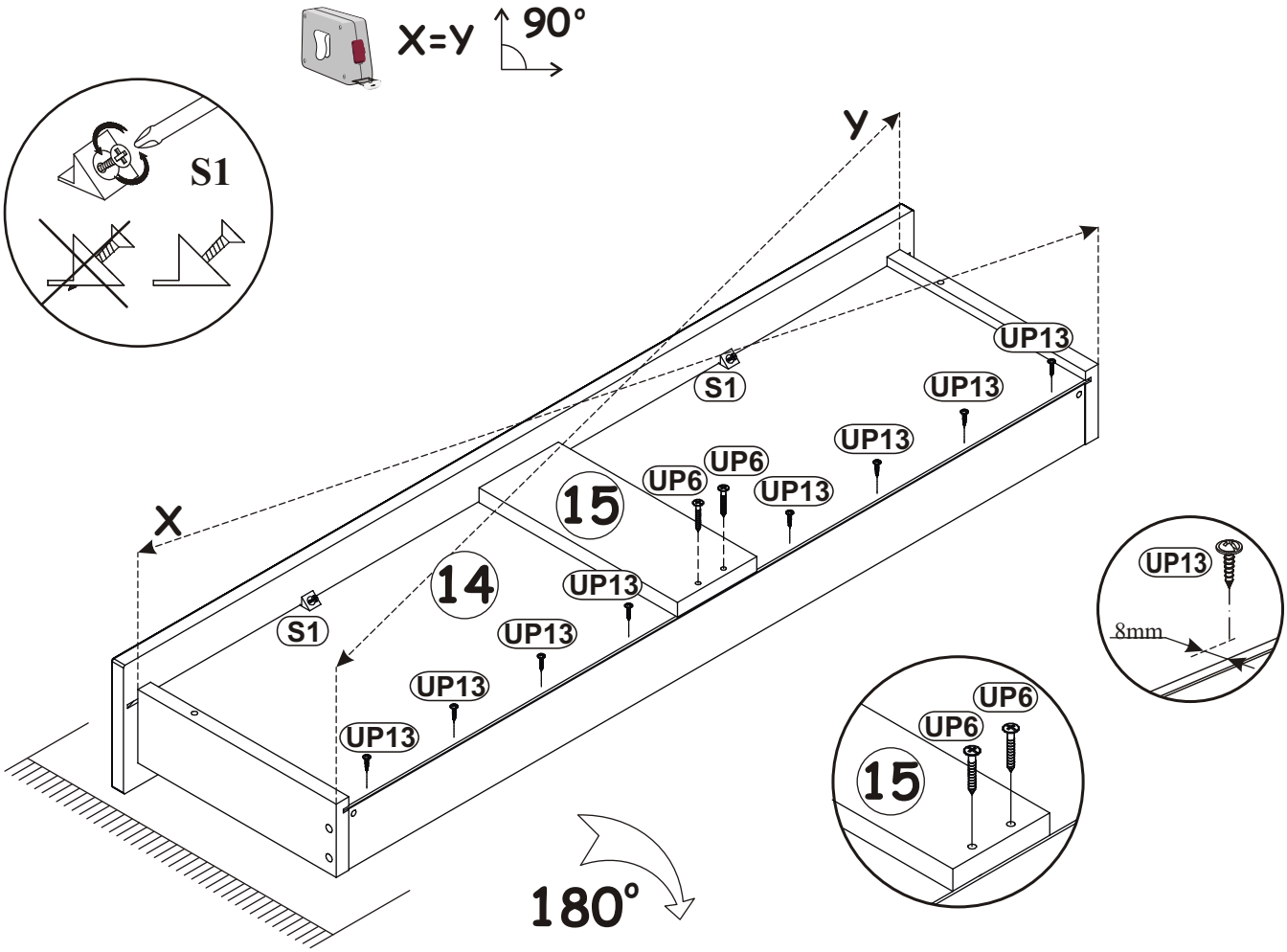

12

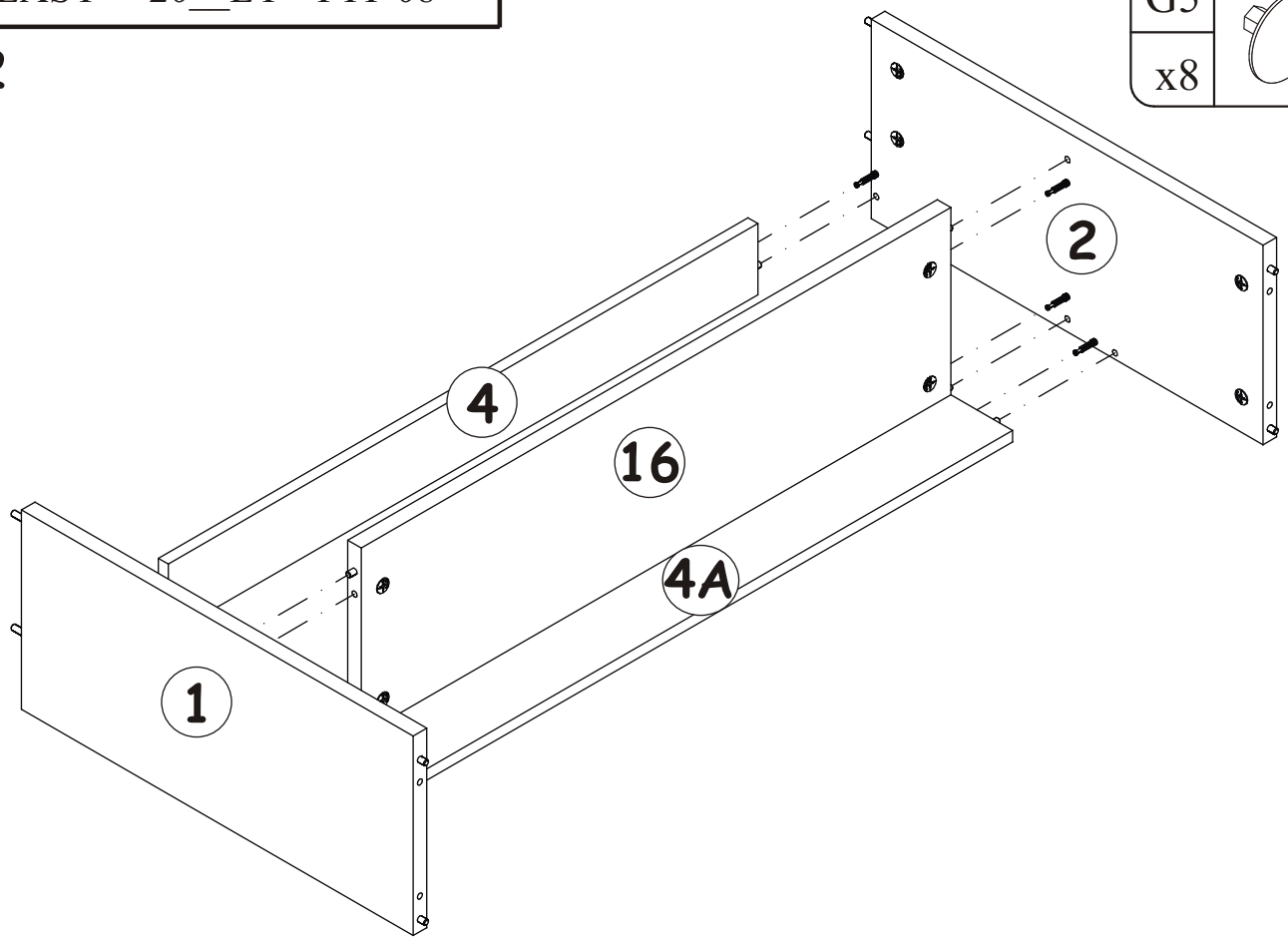

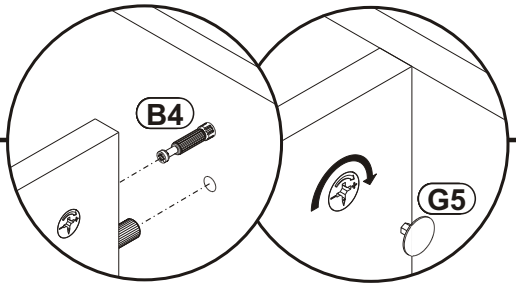

13

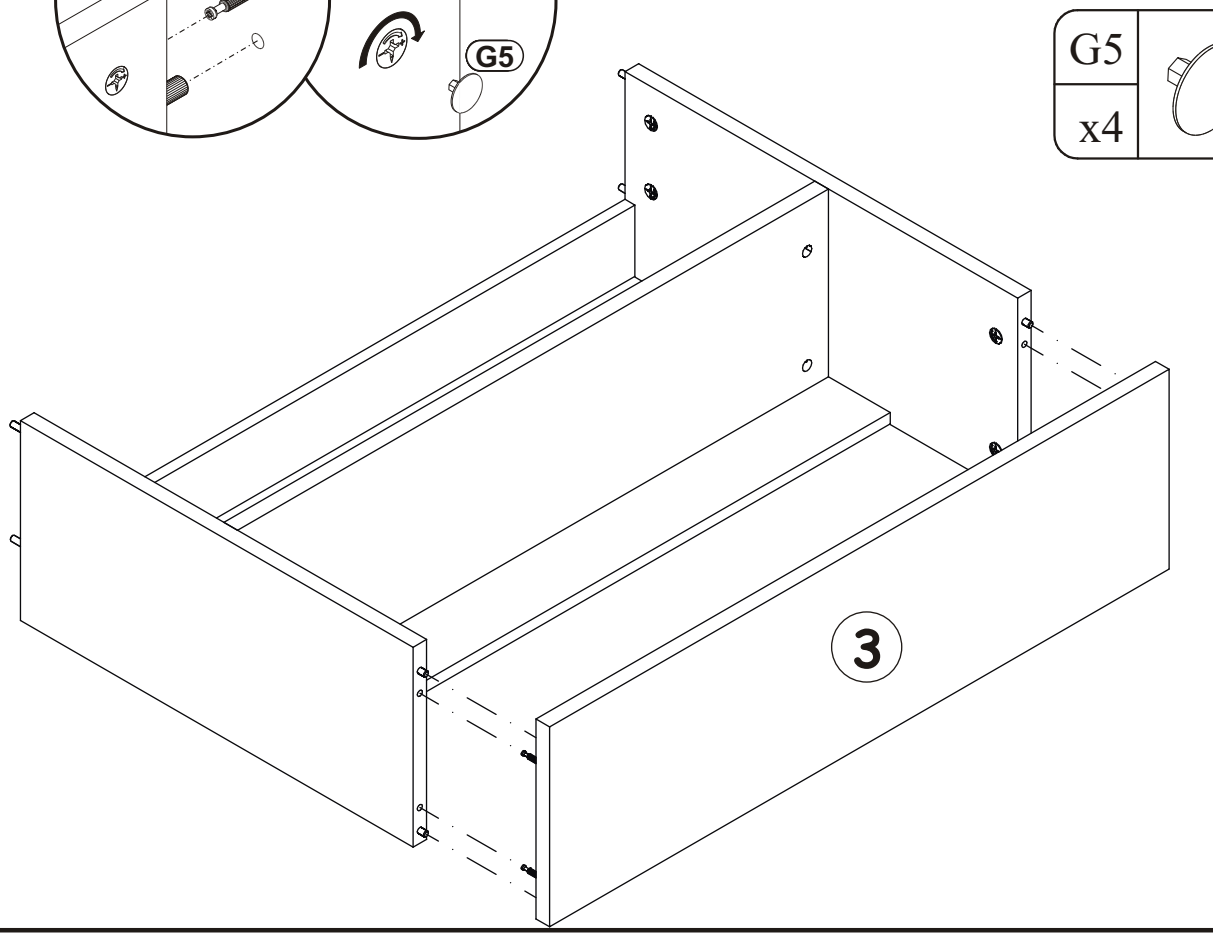

14

G5 x2

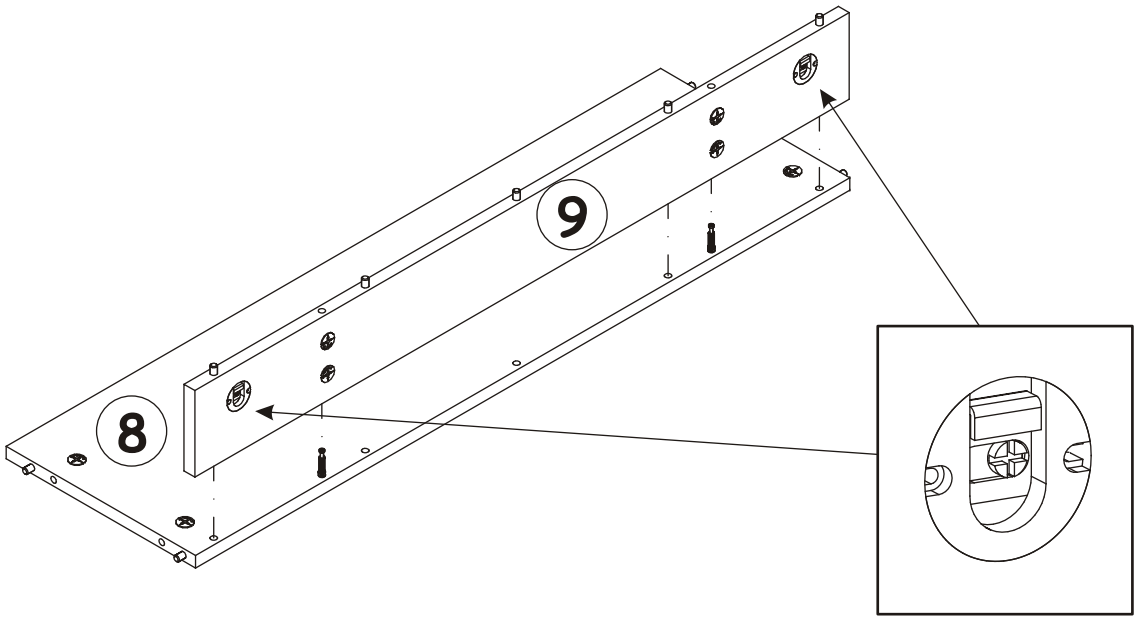

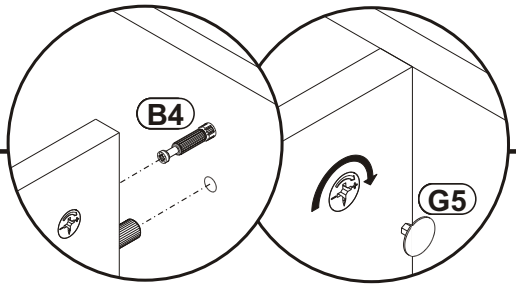

15

G5 x4

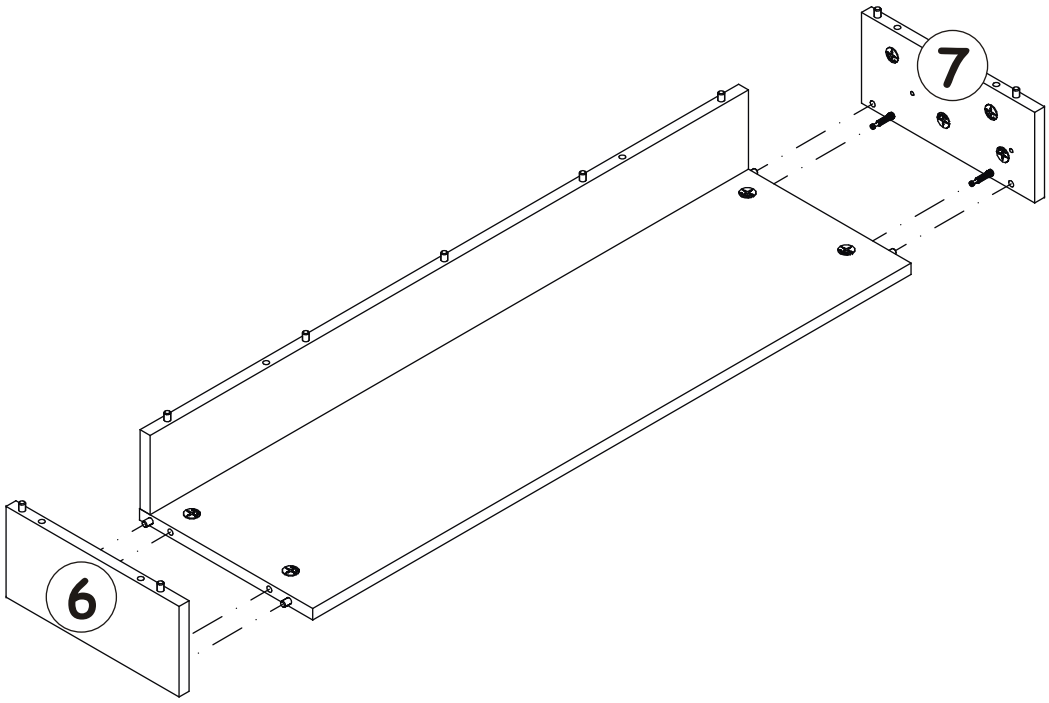

16

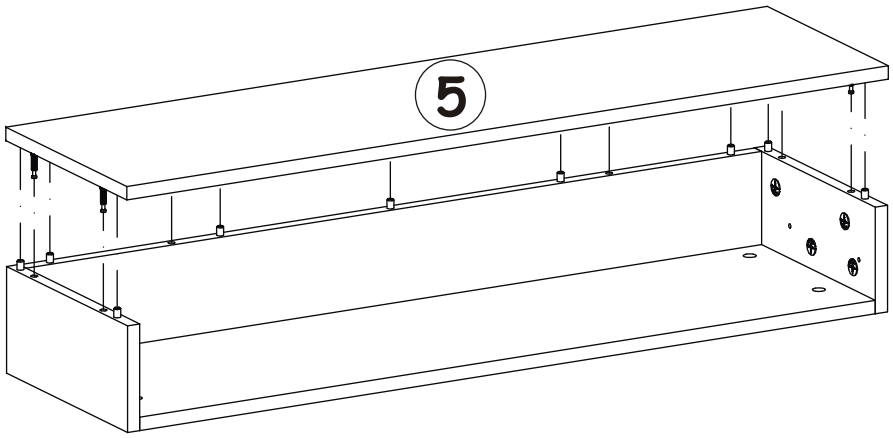
5

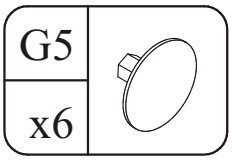
G5
x6

17

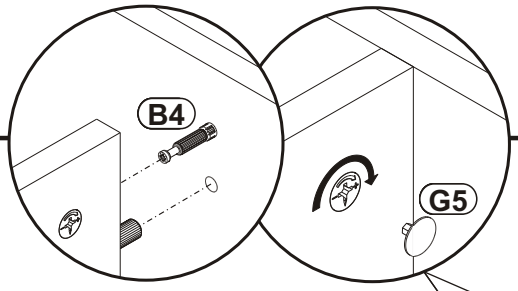
B4
G5

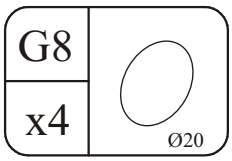
G8
x4
Ø20

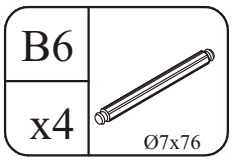
B6
x4
Ø7x76

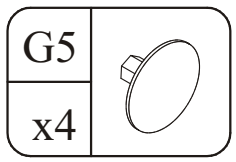
G5
x4

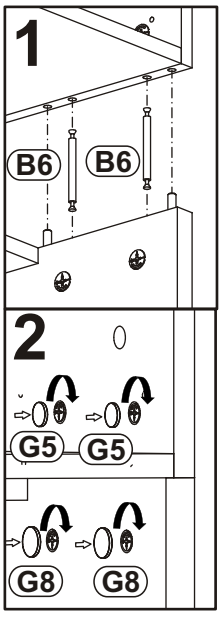
1
B6
B6
2
G5
G5
G8
G8

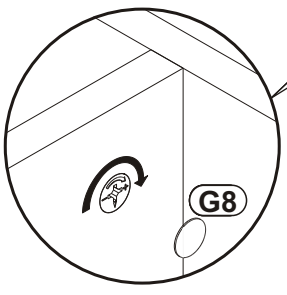
G8

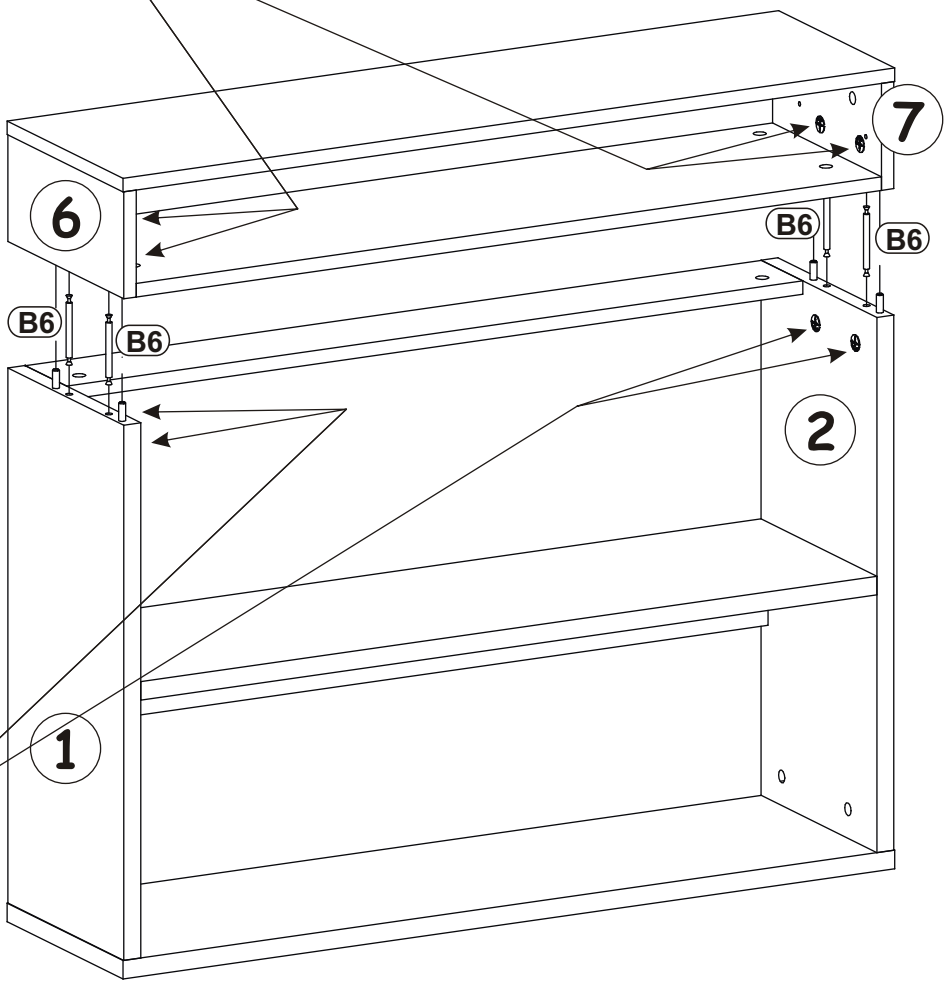
6
7
B6
B6
B6
B6
2
1

18

QU	D20	D10
x1	x4	x4
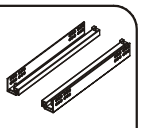 L-250mm	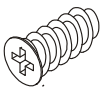 ESØ6x9,5	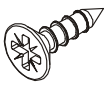 USØ3,5x13

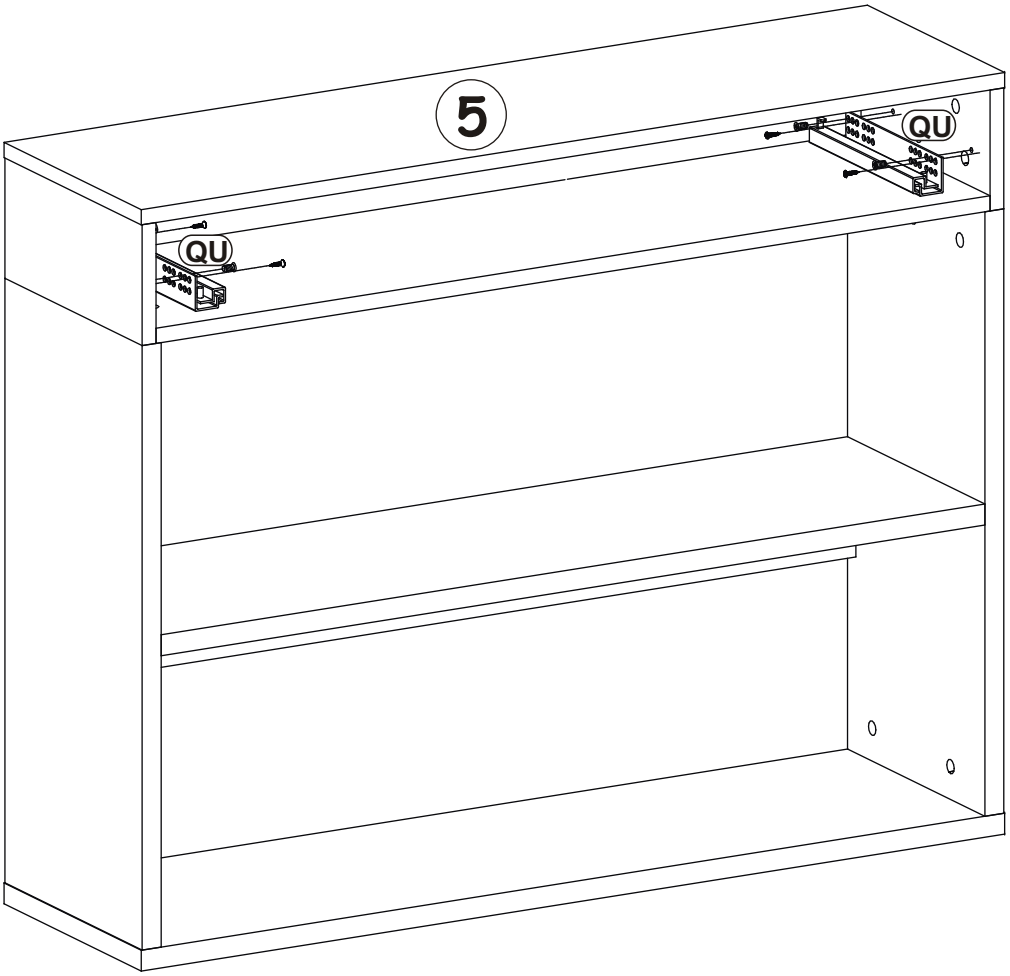

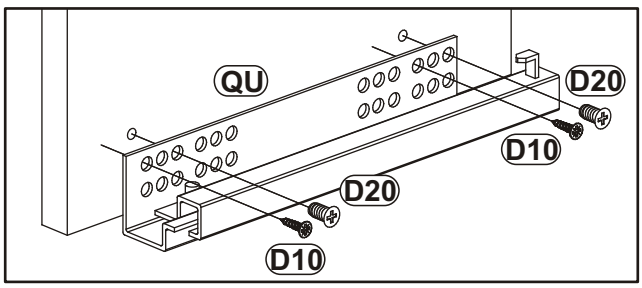

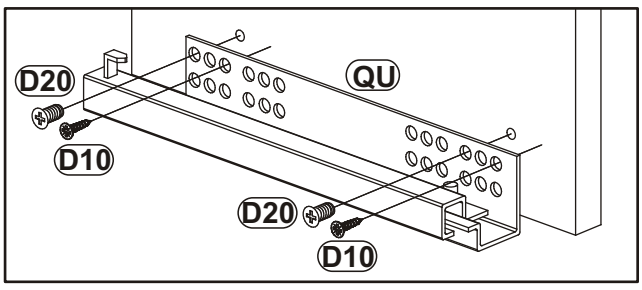

19

KR3 x4 Ø10

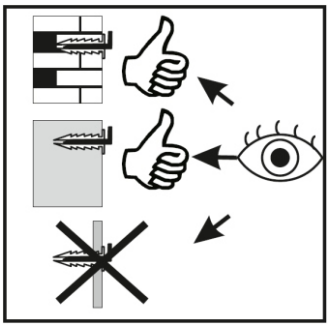

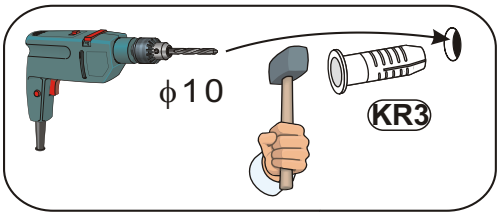

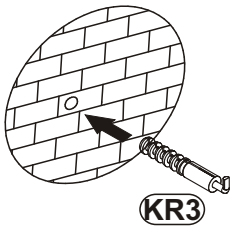

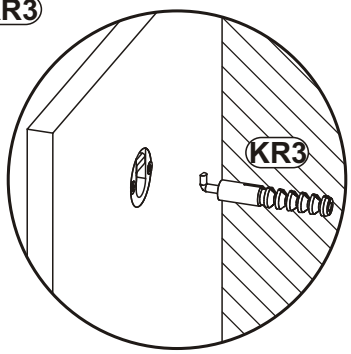

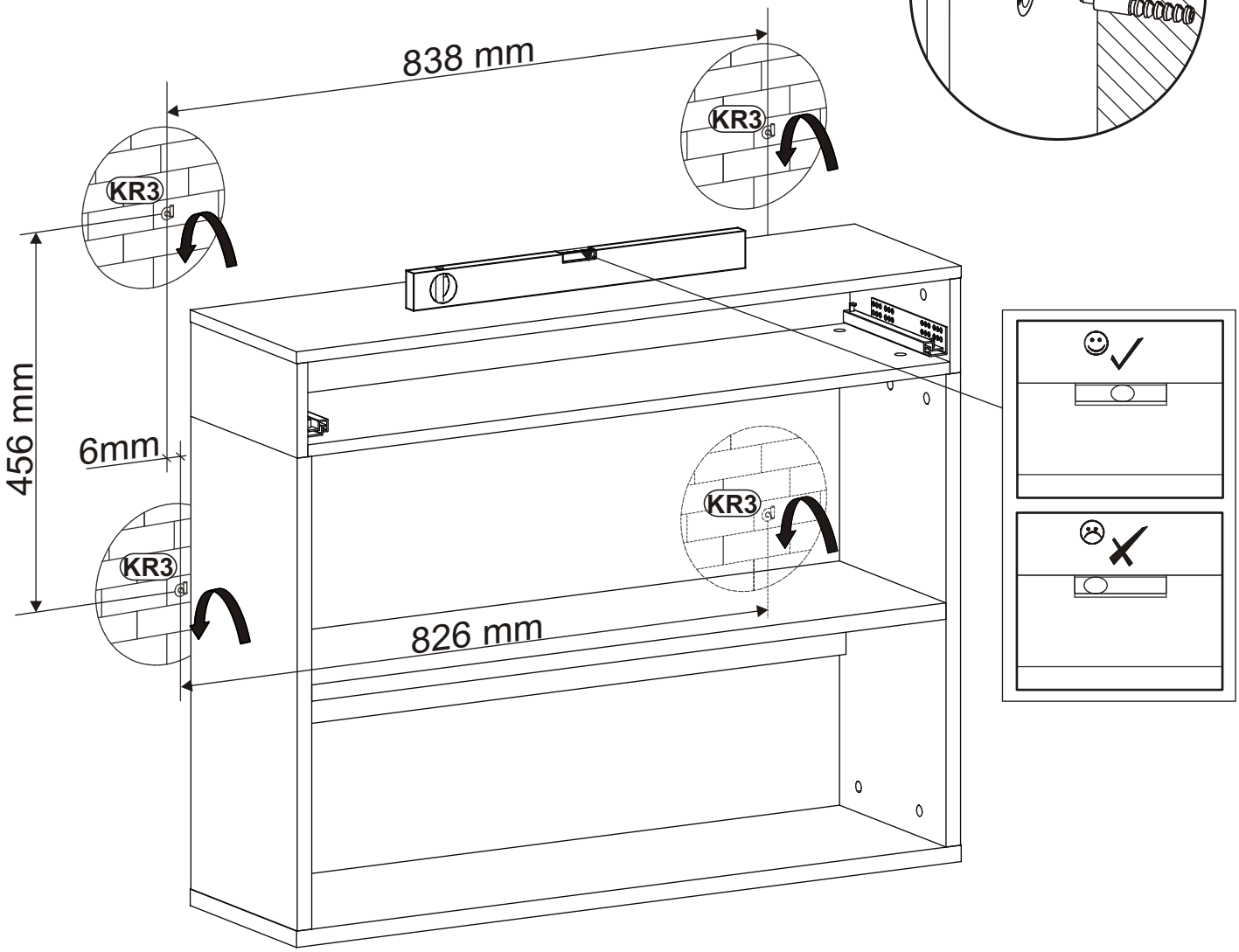

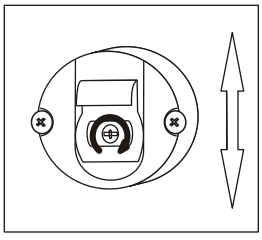
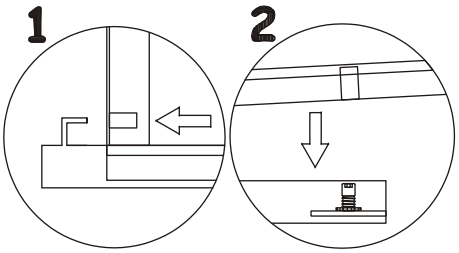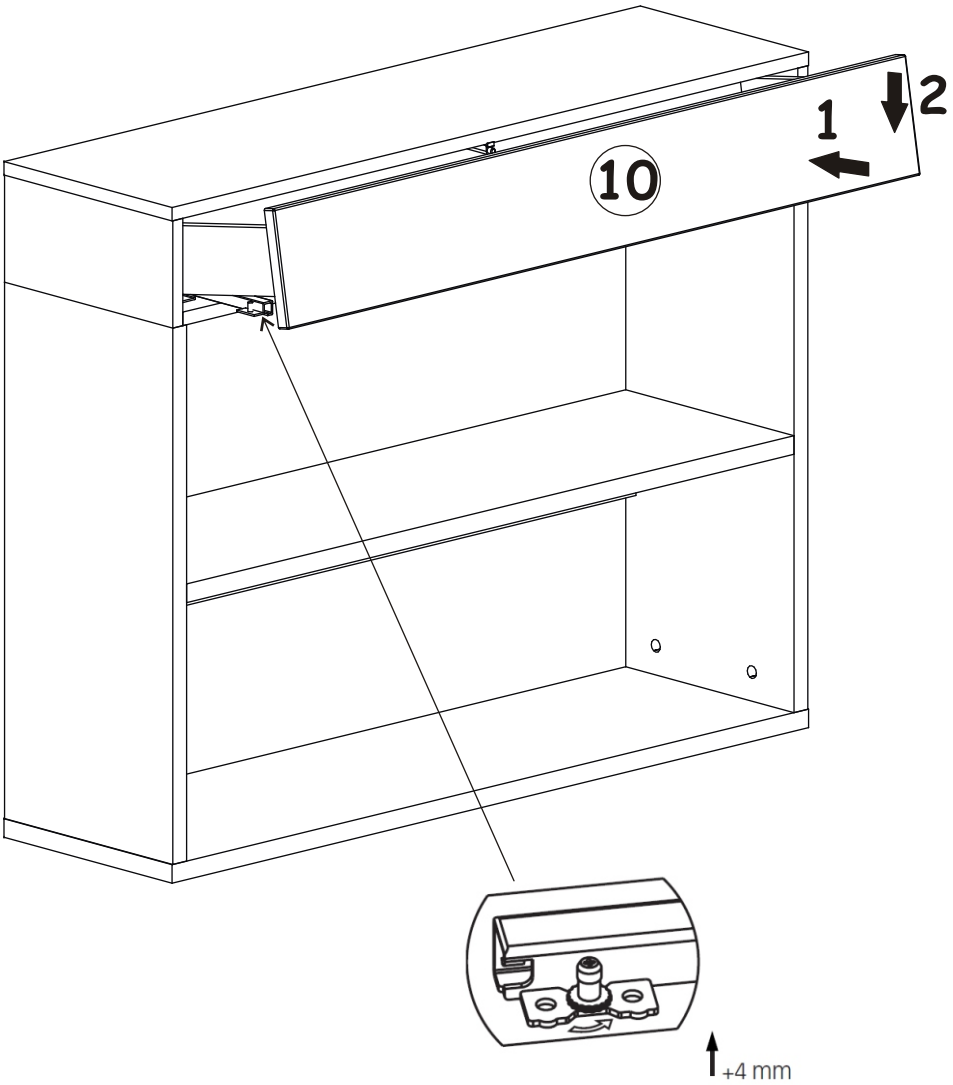
20