14/12/2021	M4

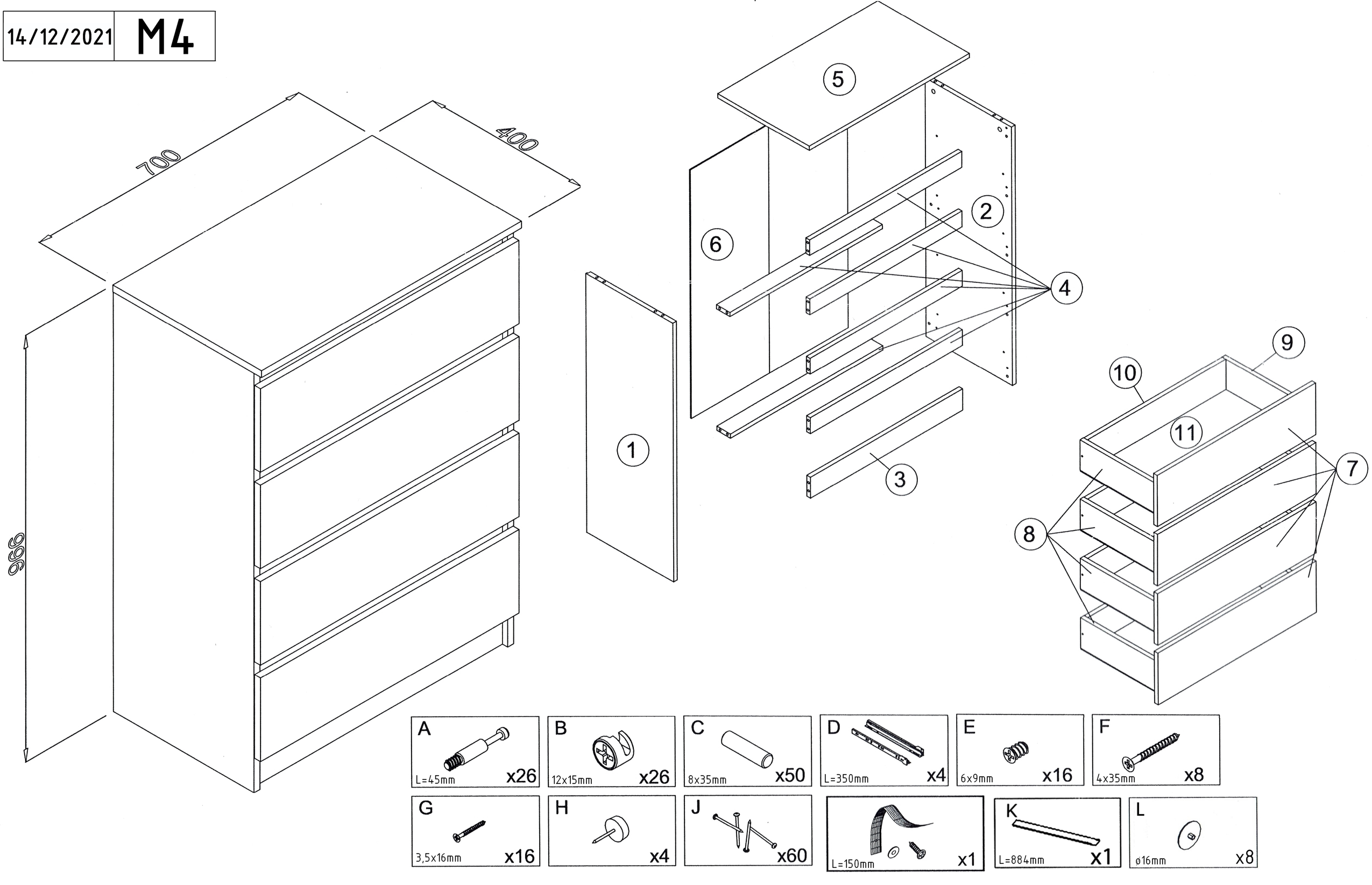

1

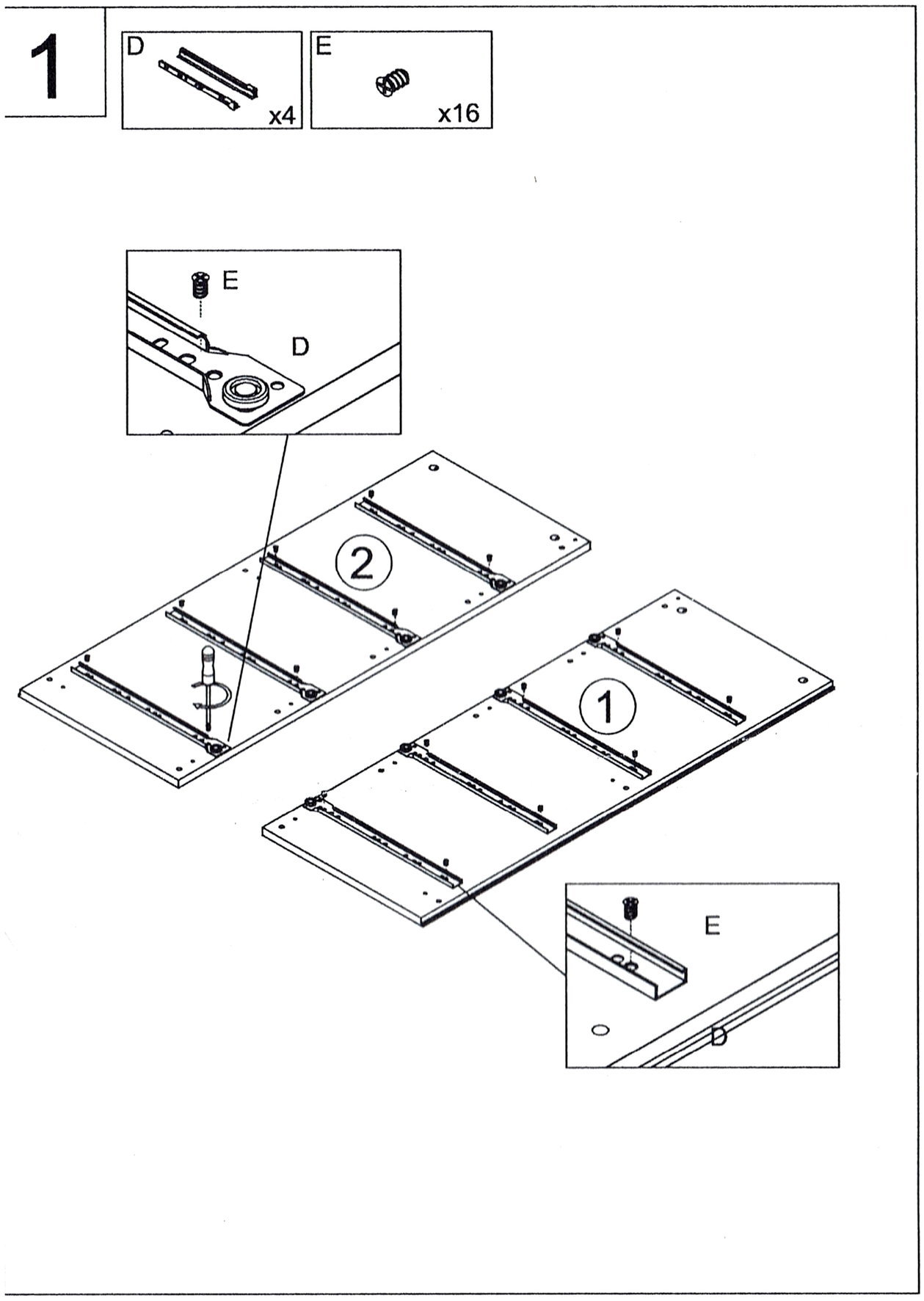

2

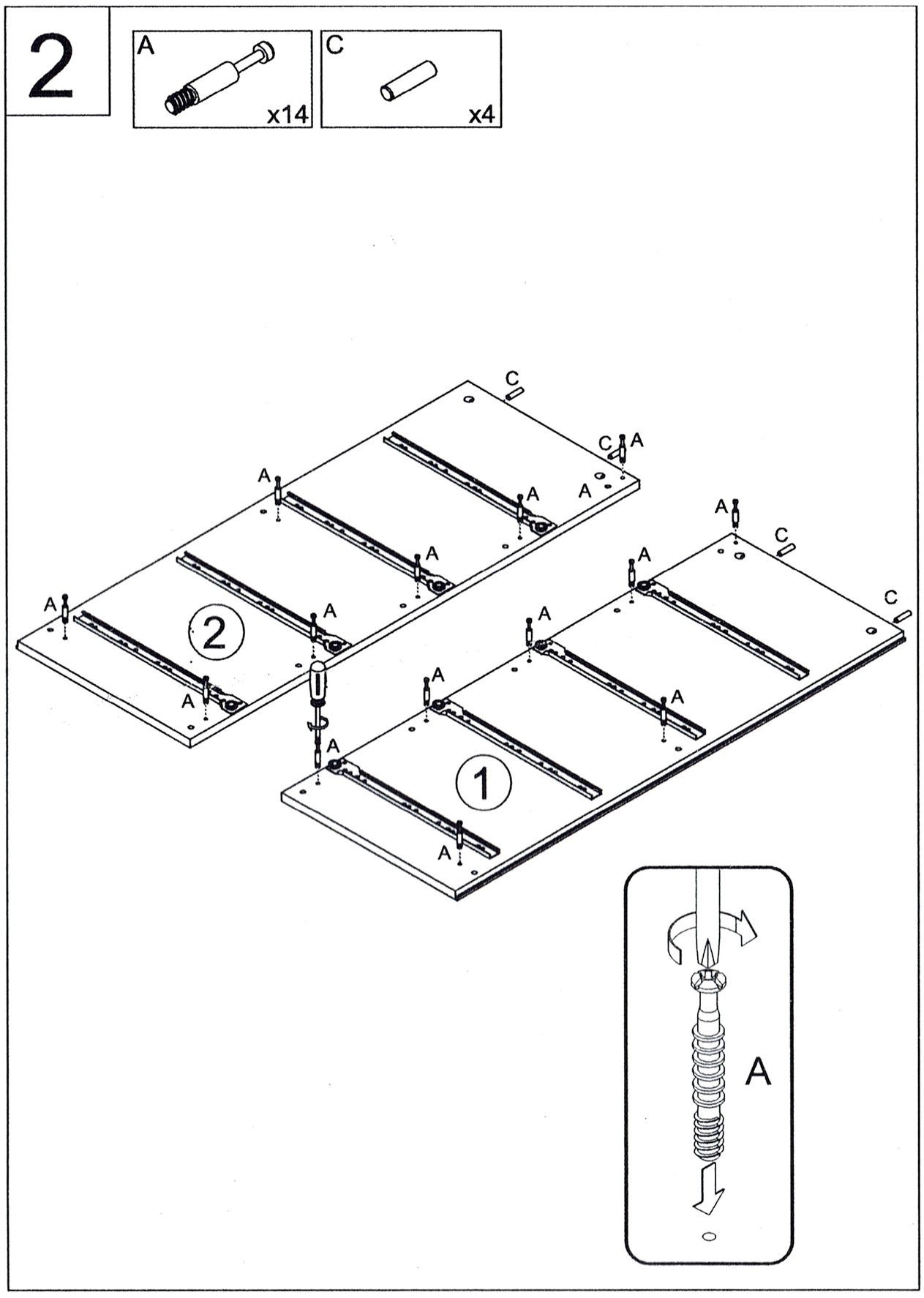

3

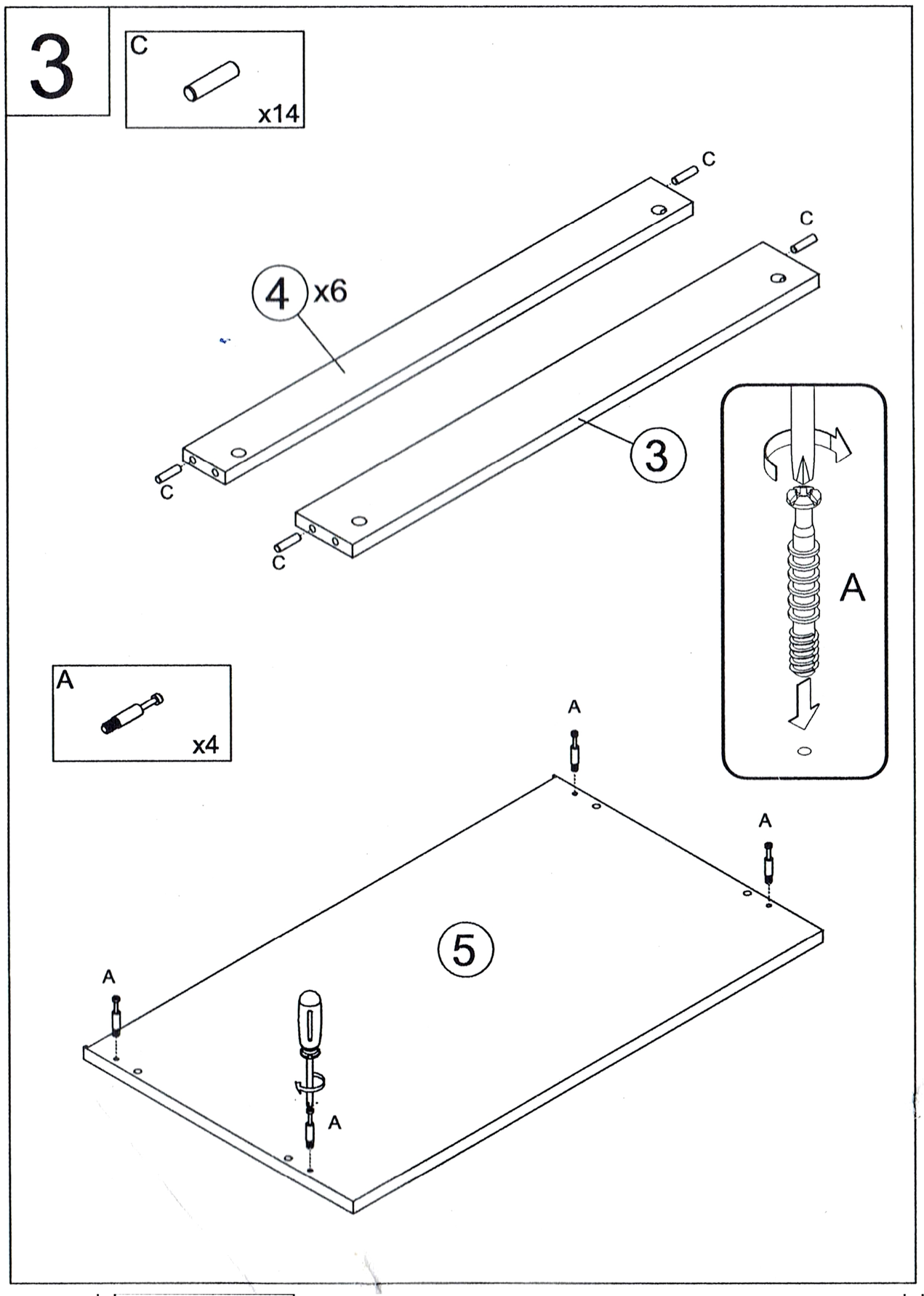
C
x14
C
C
4 x6
3
C
C
A
x4
A
A
5
A
A

4

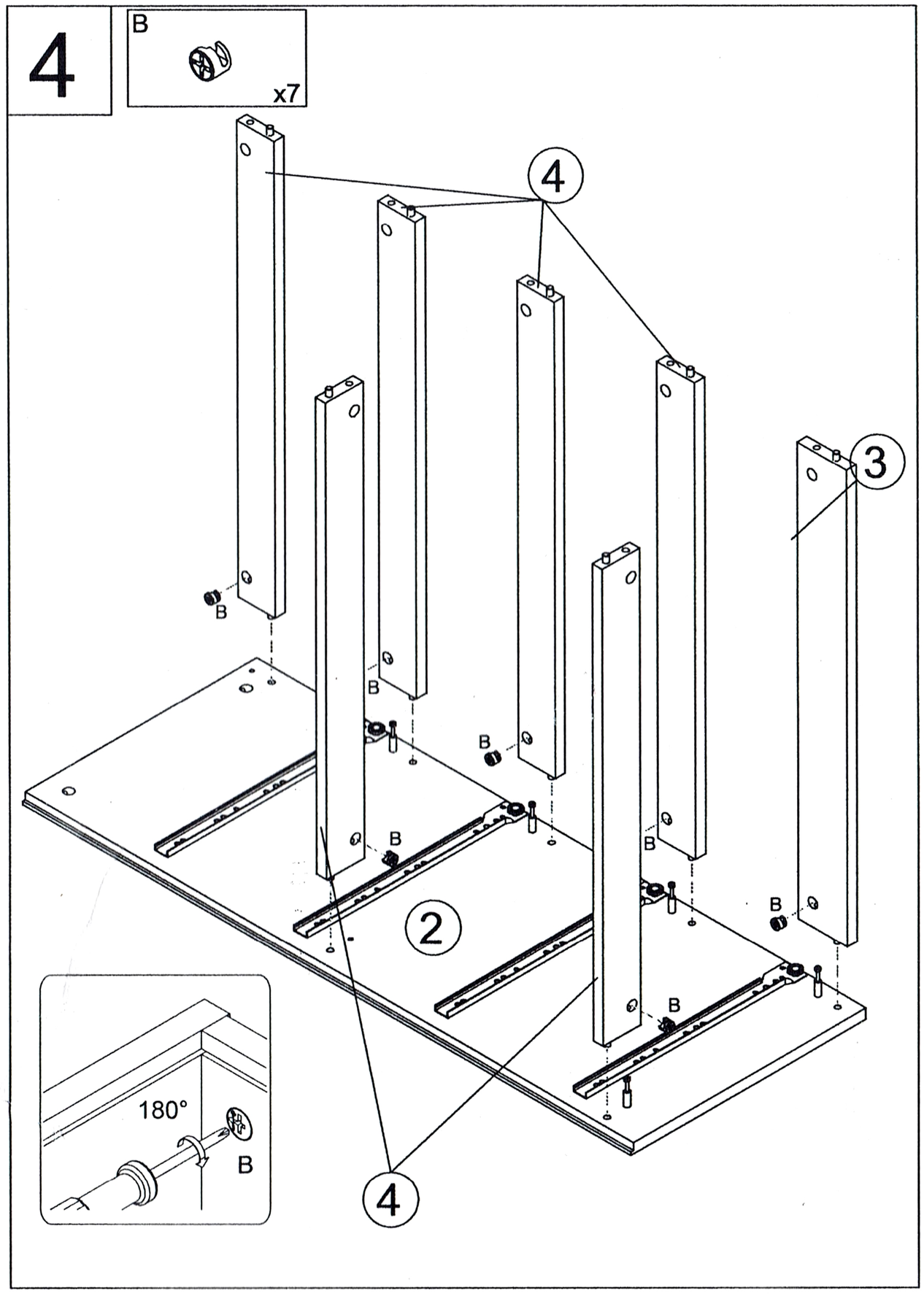
B
x7
4
3
B
B
B
B
B
B
B
2
180°
B
4

5

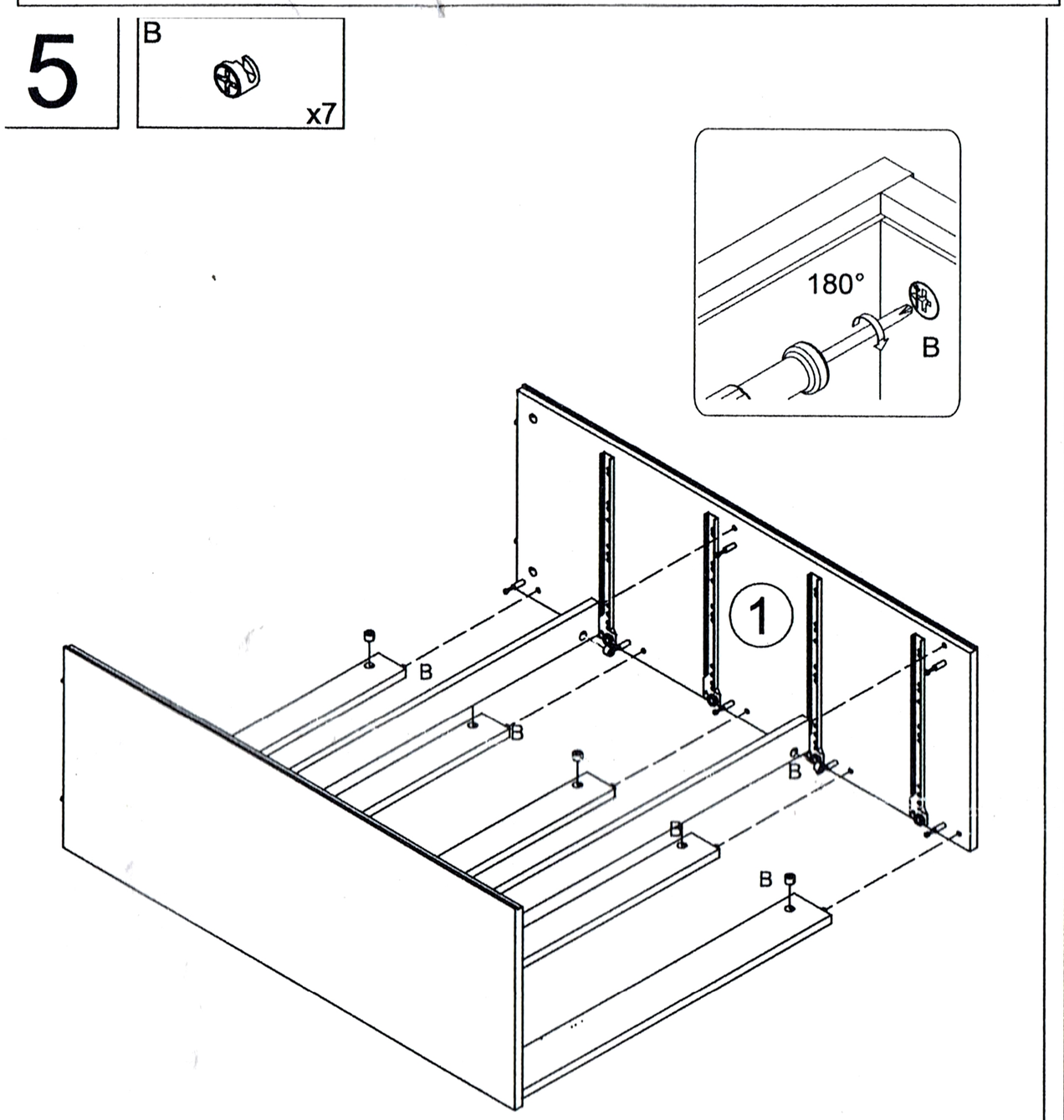
B
x7
180°
B
1
B
B
B
B
B

6

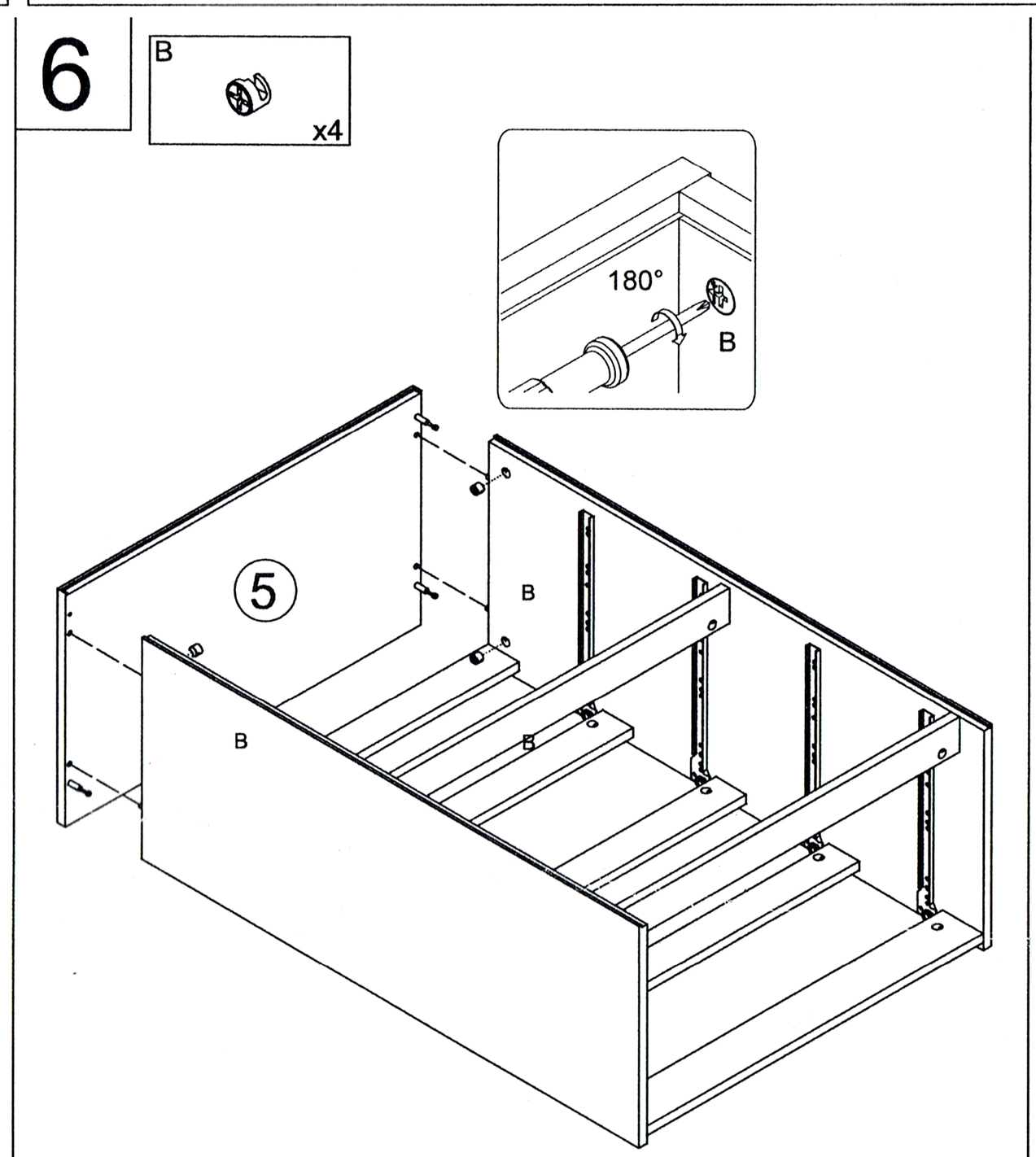
B
x4
180°
B
5
B
B
B

7

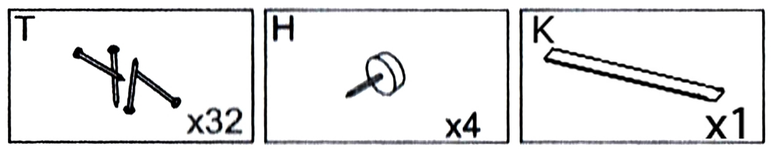
T
x32
H
x4
K
x1

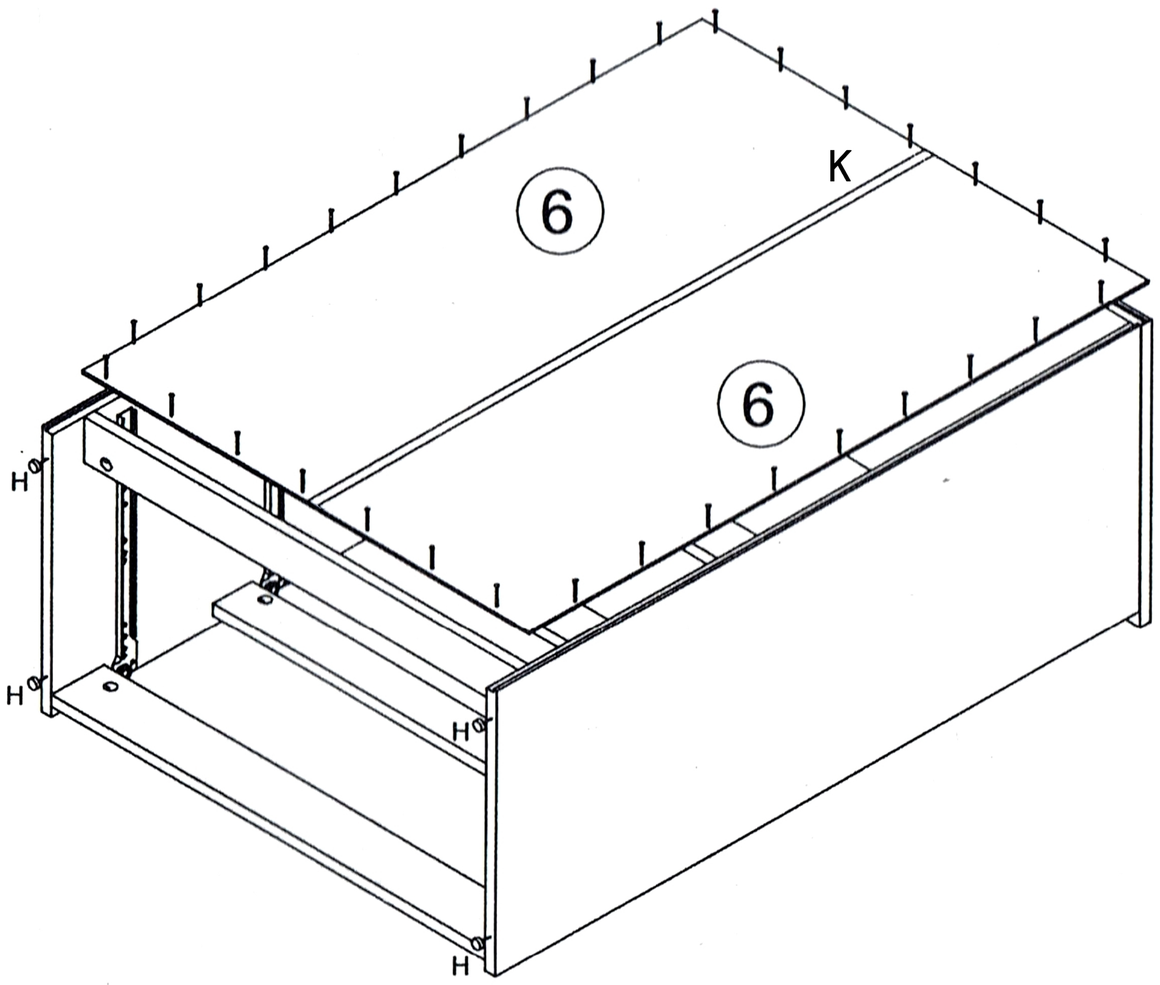
6
K
6
H
H
H
H

8

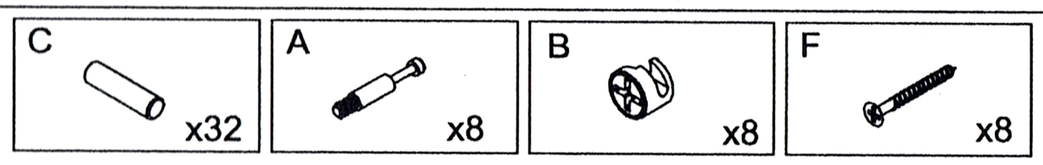
C
x32
A
x8
B
x8
F
x8

x4

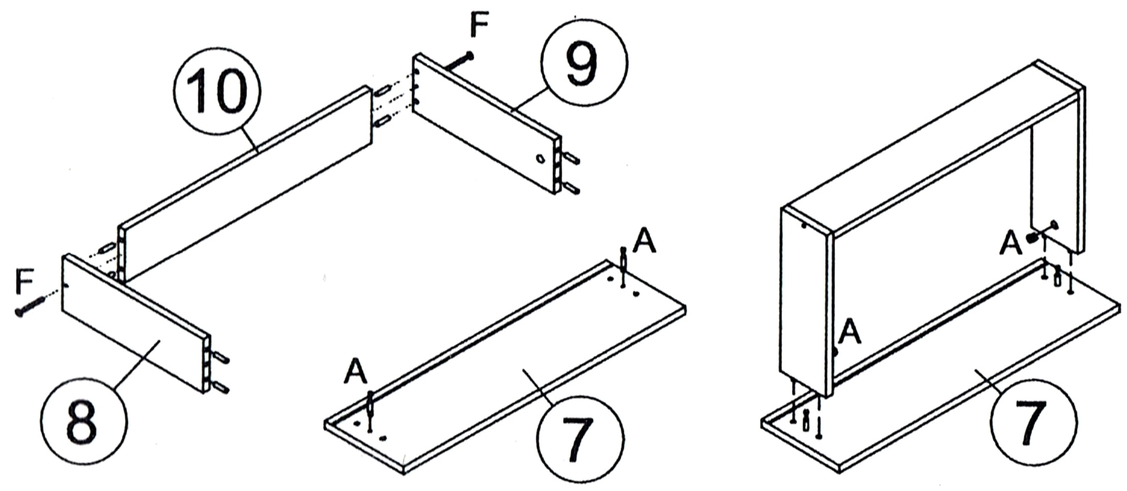
F
10
9
F
8
A
A
7
A
A
7

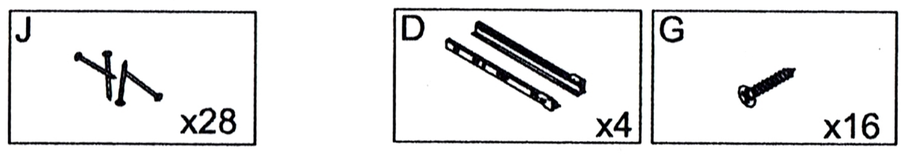
J
x28
D
x4
G
x16

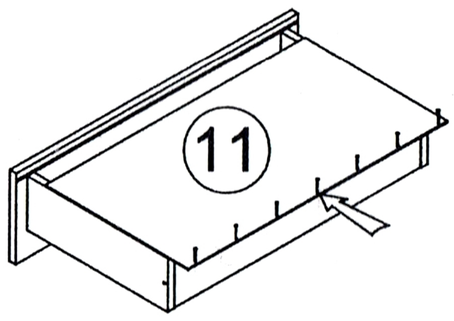
11

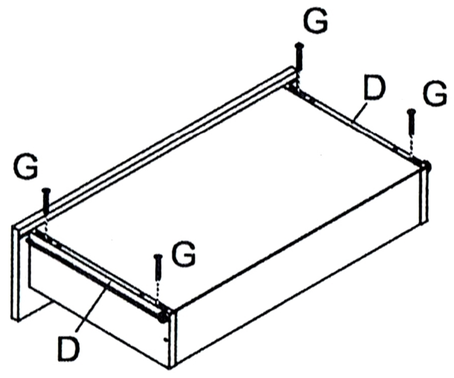
G
D
G
G
G
D

9

G
x1

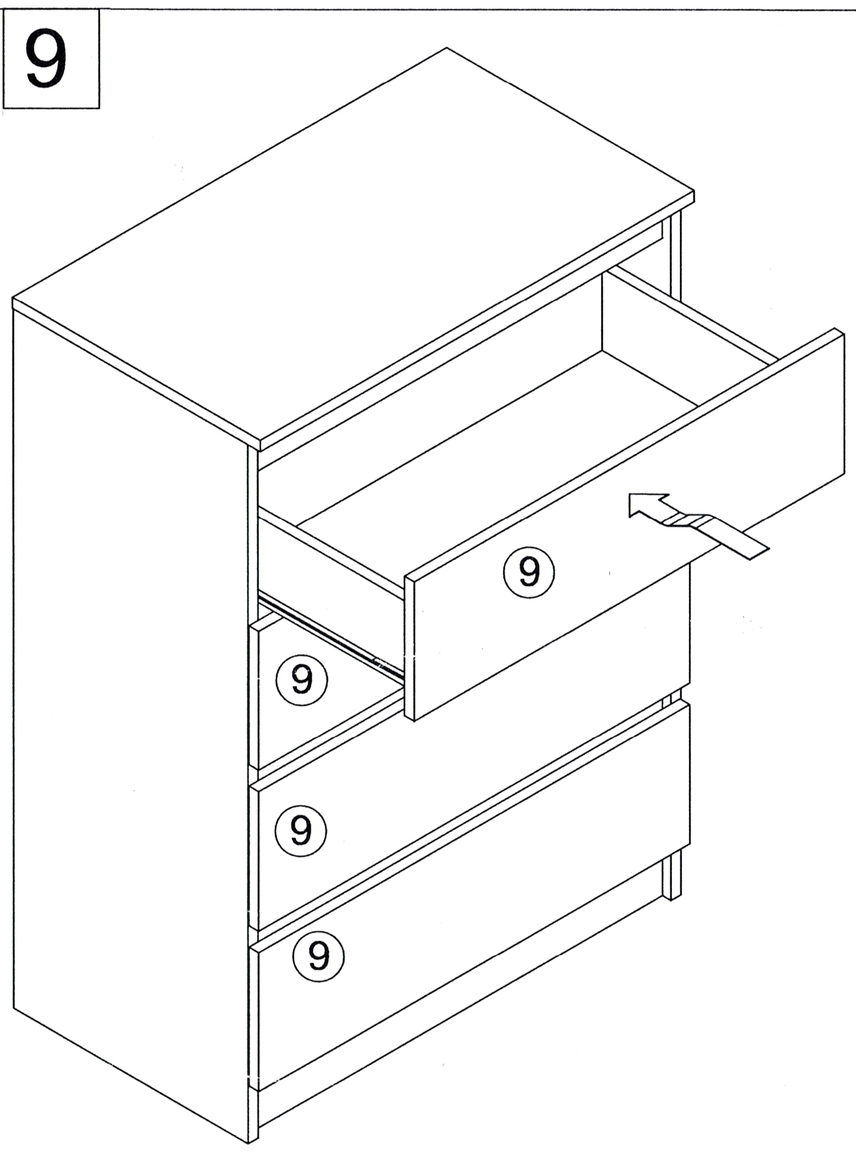
9
9
9
9

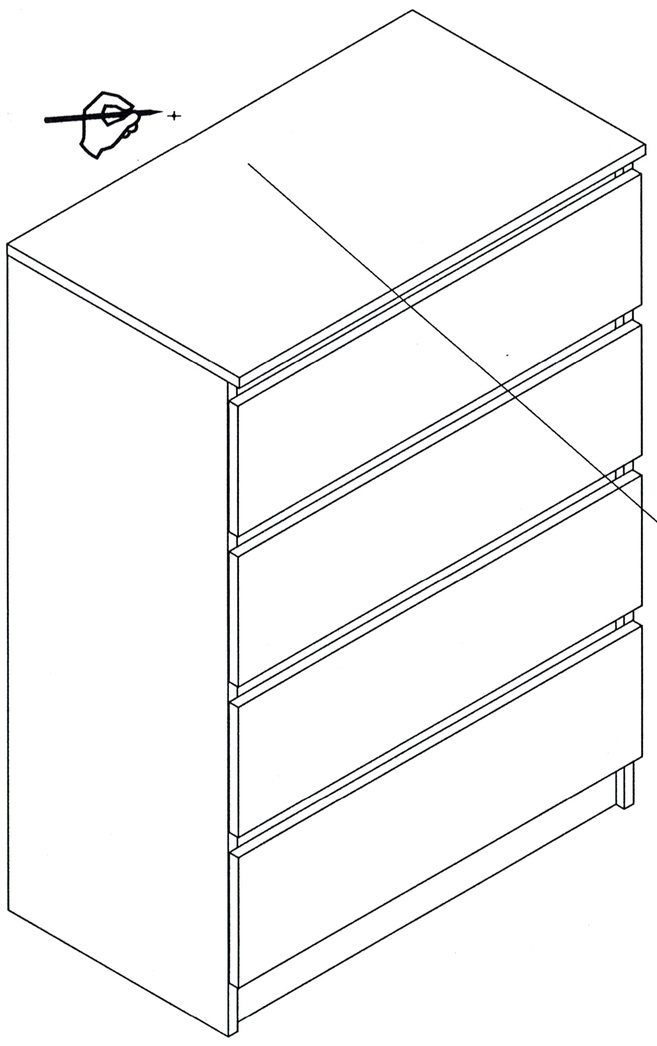

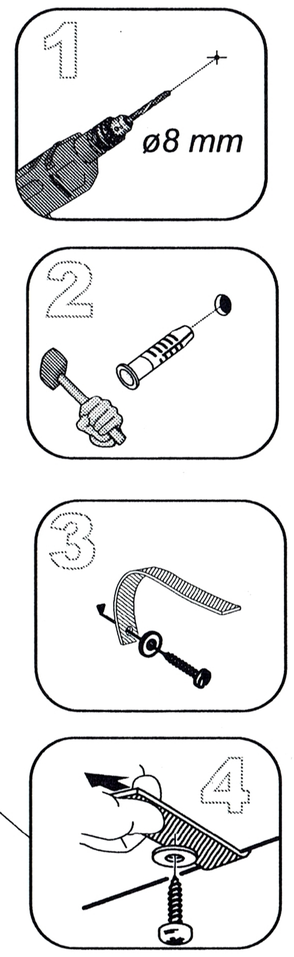
1
ø8 mm
2
3
4