D60

v.1

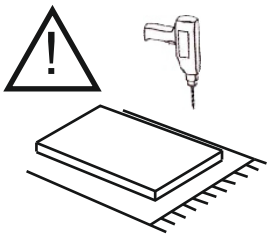

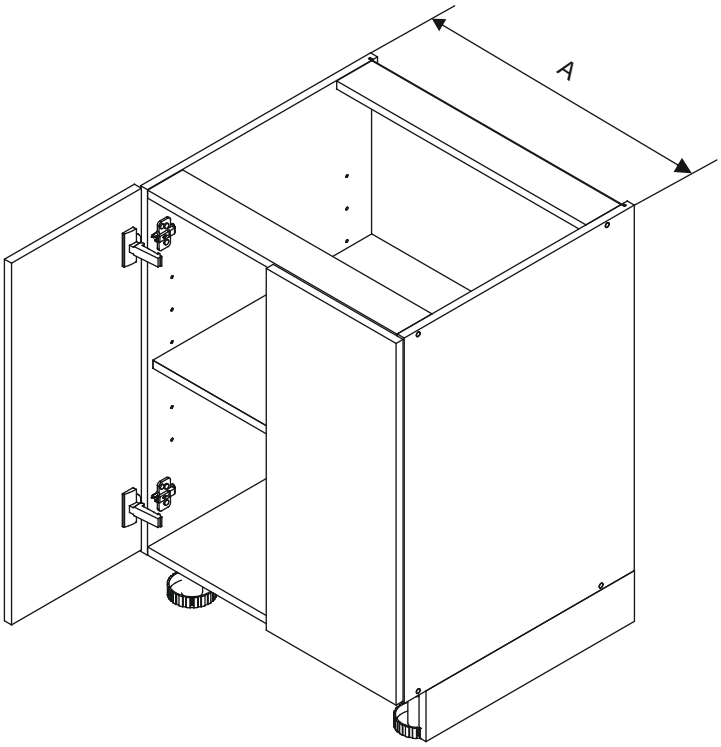
A

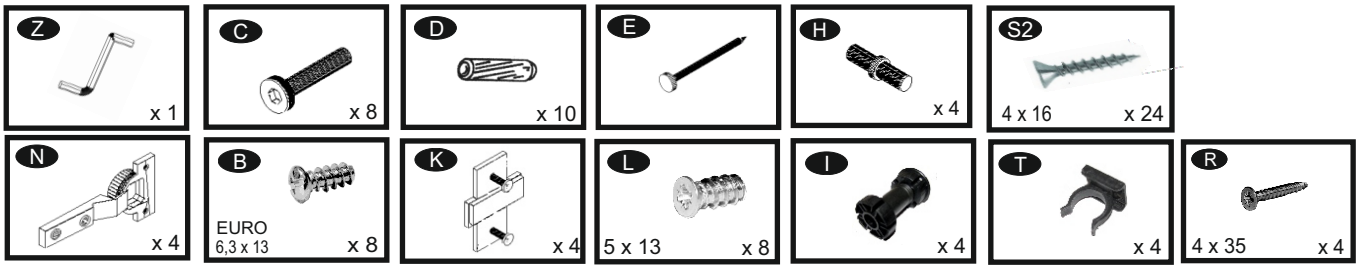
Z
x 1
C
x 8
D
x 10
E
H
x 4
S2
4 x 16
x 24
N
x 4
B
EURO
6,3 x 13
x 8
K
x 4
L
5 x 13
x 8
I
x 4
T
x 4
R
4 x 35
x 4

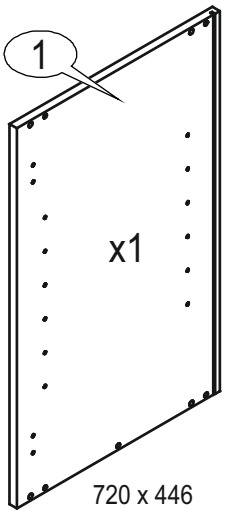
1
x1
720 x 446

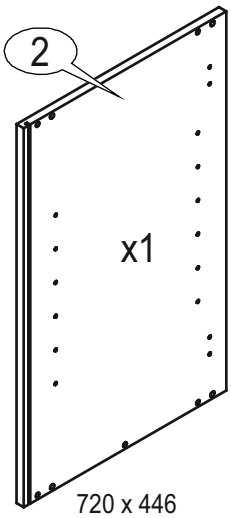
2
x1
720 x 446

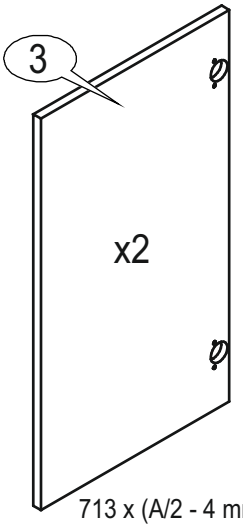
3
x2
713 x (A/2 - 4 mm)

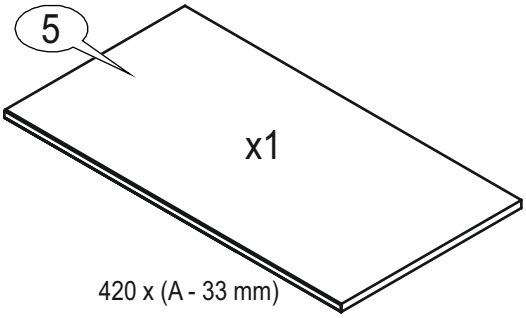
5
x1
420 x (A - 33 mm)

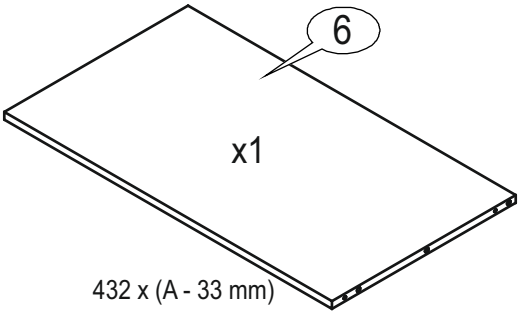
6
x1
432 x (A - 33 mm)

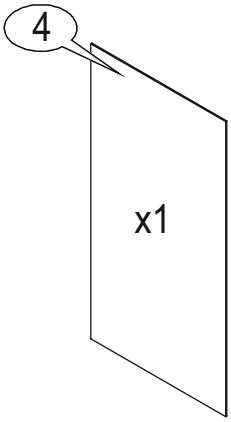
4
x1
716 x (A - 22 mm)

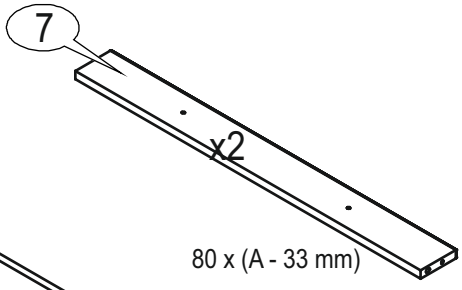
7
x2
80 x (A - 33 mm)

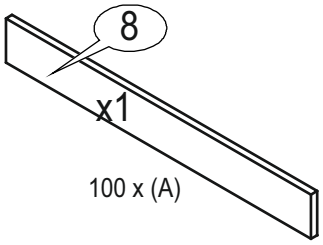
8
x1
100 x (A)

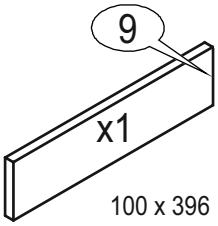
9
x1
100 x 396

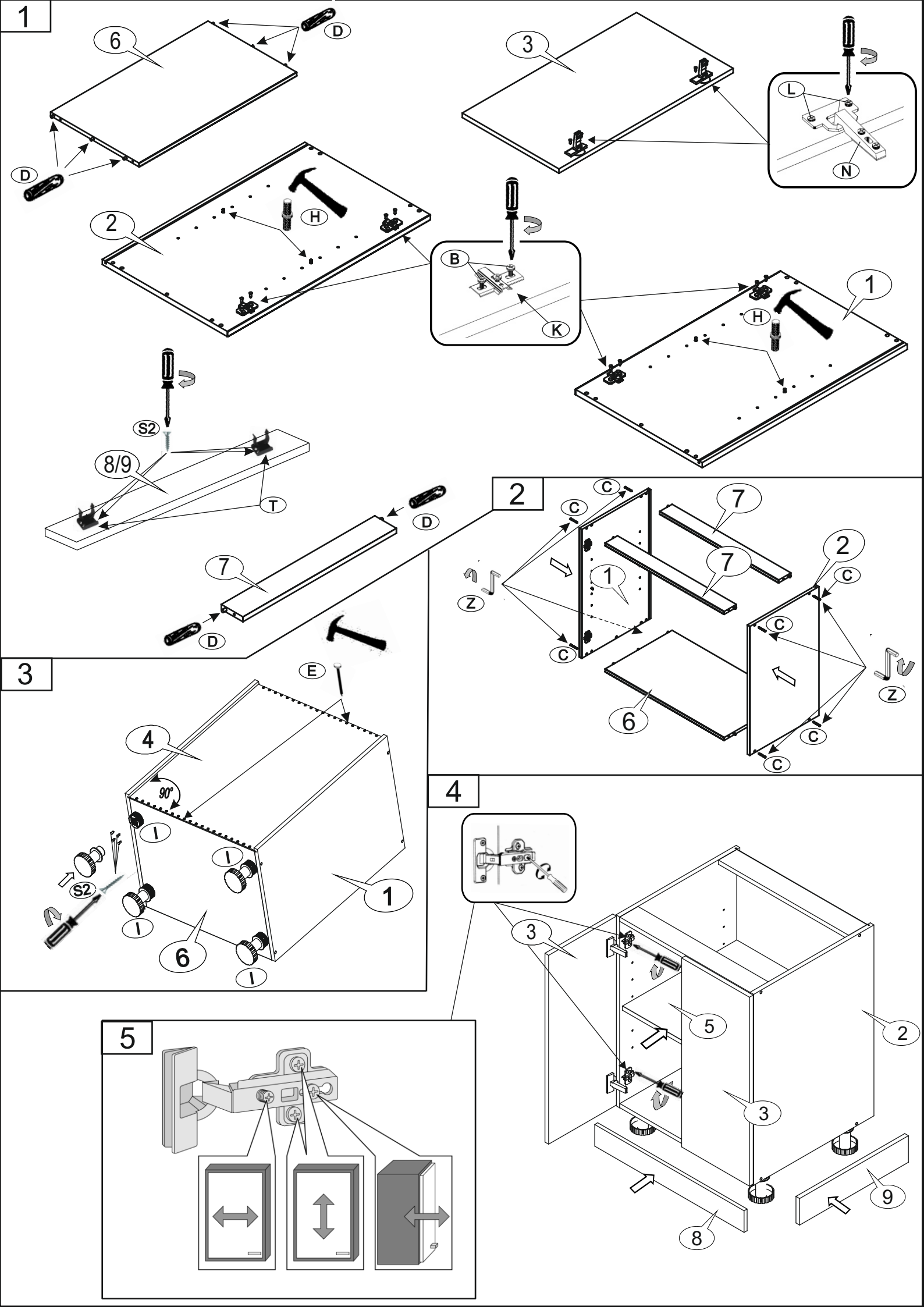
1
6
D
D
3
L
N
2
H
B
K
1
H
S2
8/9
T
2
C
C
7
7
2
C
1
Z
C
C
C
Z
6
C
C
D
7
D
3
E
4
90°
I
I
S2
I
1
6
I
4
3
5
2
3
9
8
5